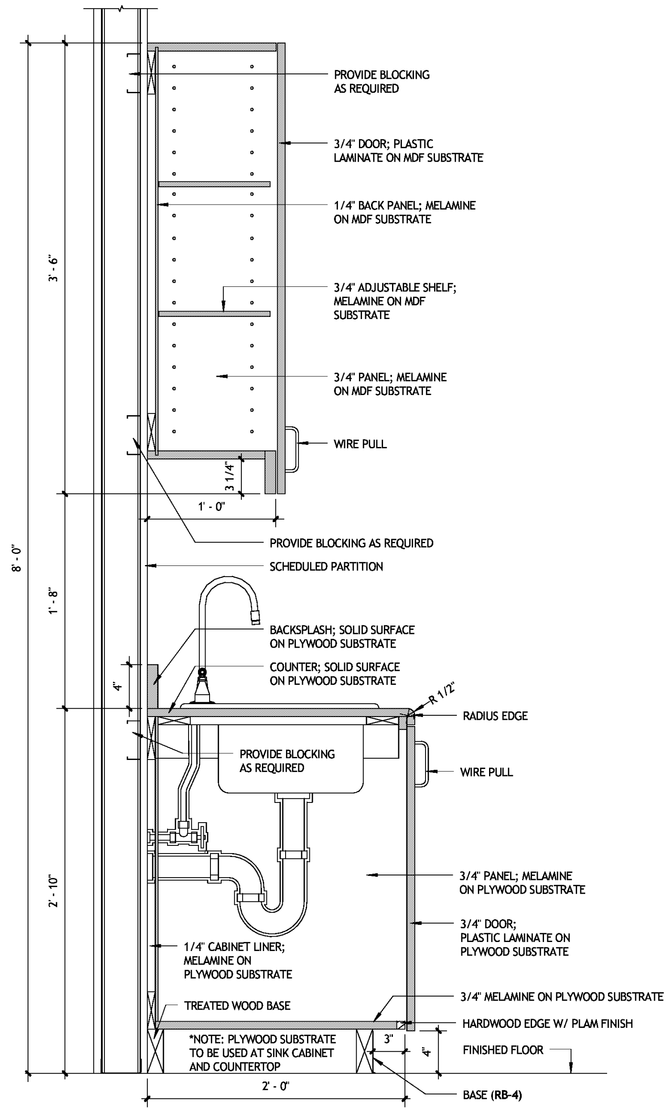

1 MILLWORK DETAIL
A821 1 1/2" = 1'-0"

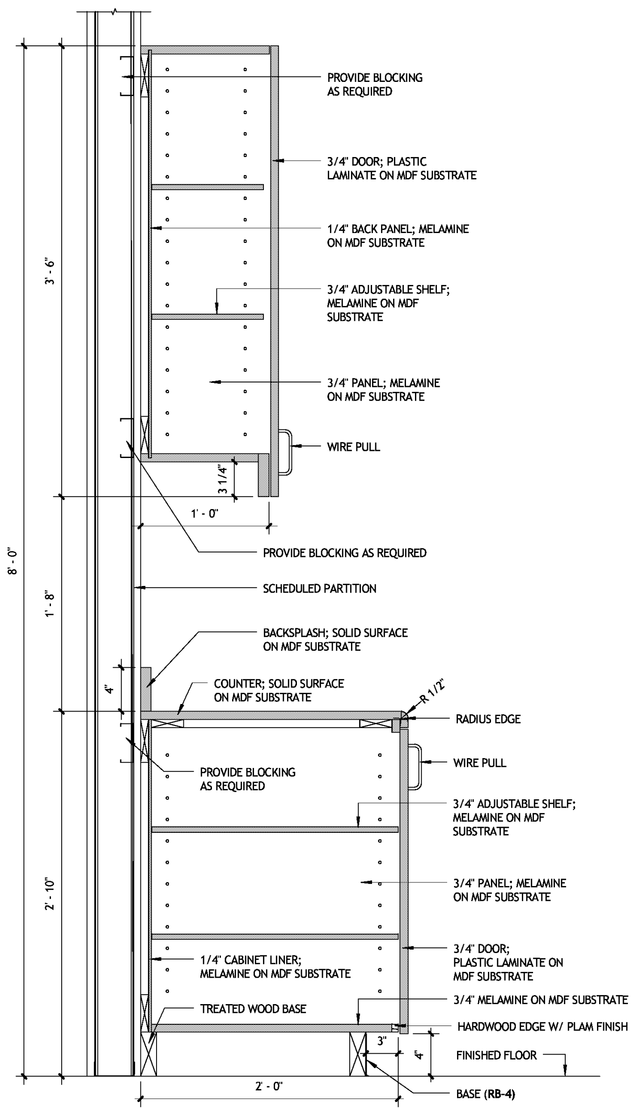

2 MILLWORK DETAIL
A821 1 1/2" = 1'-0"

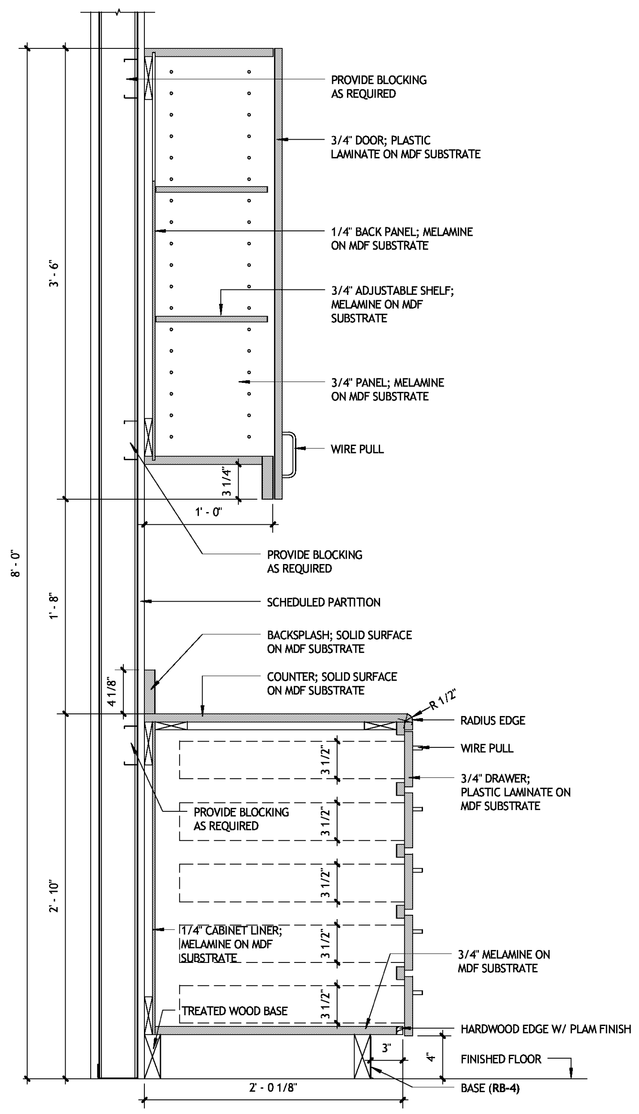

3 MILLWORK DETAIL
A821 1 1/2" = 1'-0"

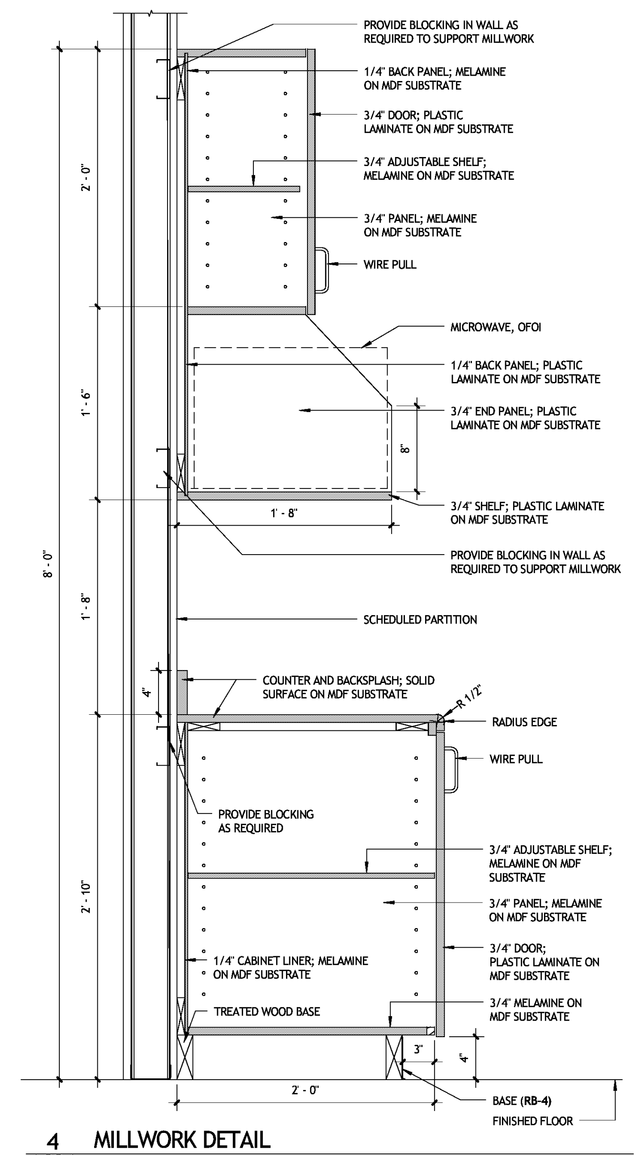

4 MILLWORK DETAIL
A821 1 1/2" = 1'-0"

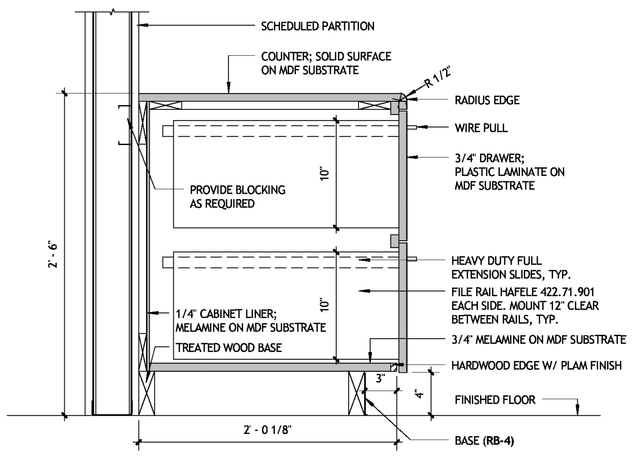

5 MILLWORK DETAIL
A821 1 1/2" = 1'-0"

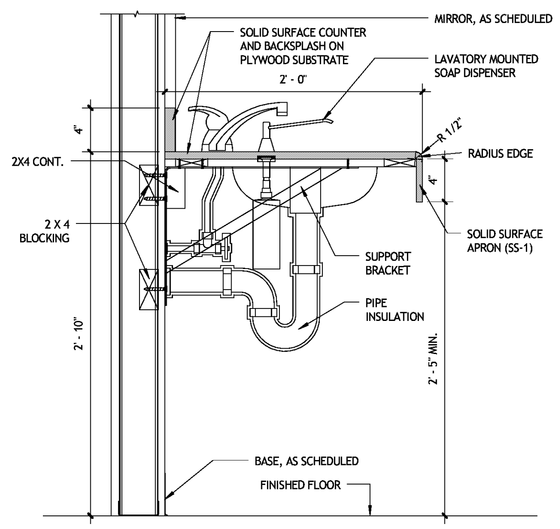

7 MILLWORK DETAIL
A821 1 1/2" = 1'-0"

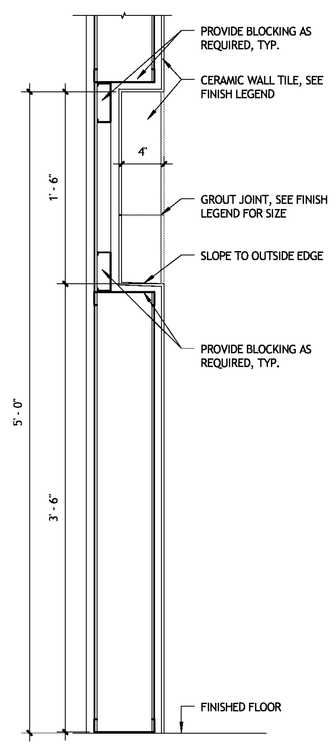

9 SHOWER NICHE DETAIL
A821 1 1/2" = 1'-0"

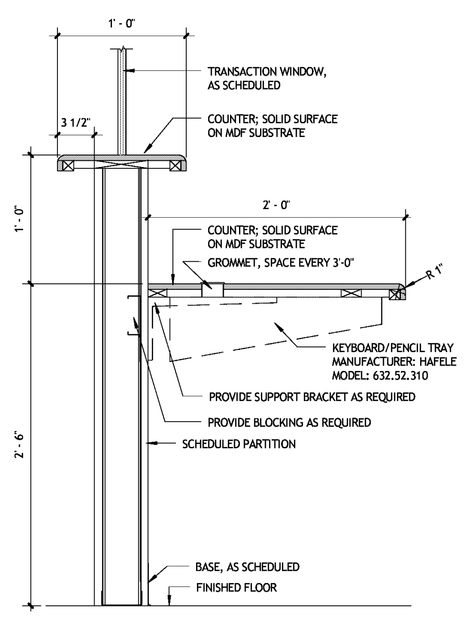

10 MILLWORK DETAIL
A821 1 1/2" = 1'-0"

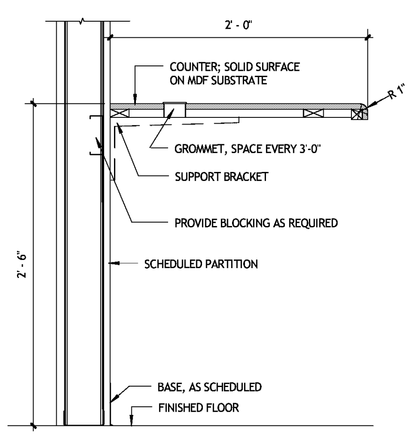

6 MILLWORK DETAIL
A821 1 1/2" = 1'-0"

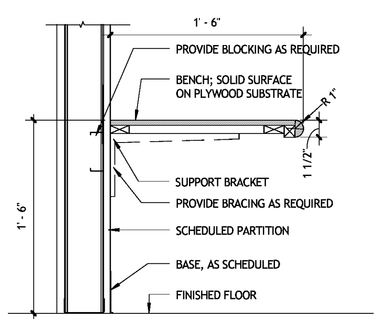

8 MILLWORK DETAIL
A821 1 1/2" = 1'-0"

SIZELER THOMPSON BROWN ARCHITECTS
PROJECT DESIGN GROUP
300 LAFAYETTE STREET, SUITE 200
NEW ORLEANS, LOUISIANA 70130
(504) 523-6472 FAX (504) 529-1181

Revisions

No.	Description	Date

JEFFERSON PARISH SHERIFF'S OFFICE
FOURTH DISTRICT STATION
METAIRIE, LOUISIANA 70003

INTERIOR DETAILS (MILLWORK, ETC.)

seal	file name	drawing number
	Sub-station.rvt	A821
	project number: 51122.03	
	date: 02-25-10	
	phase: CD	