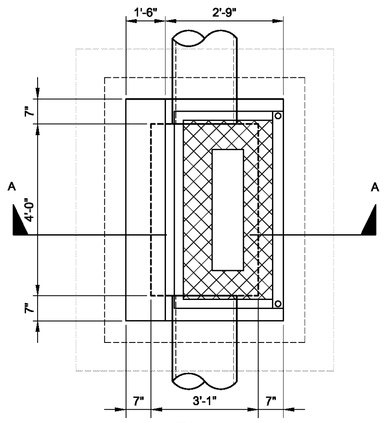


PLAN

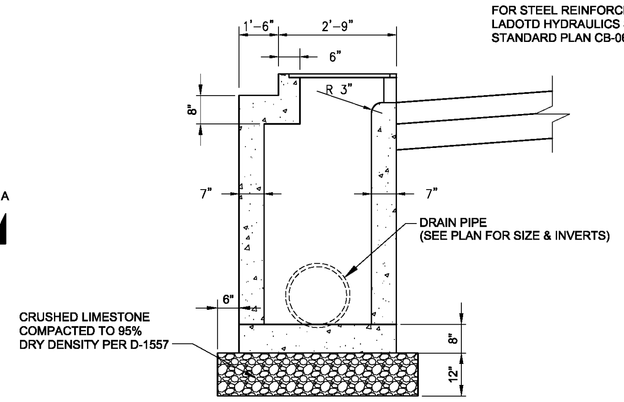


ELEVATION A-A

NOTE:

FOR STEEL REINFORCEMENT SEE LADOTD HYDRAULICS SECTION STANDARD PLAN CB-06

## 8 TYPICAL CATCH BASIN

C4 | C6 N.T.S.

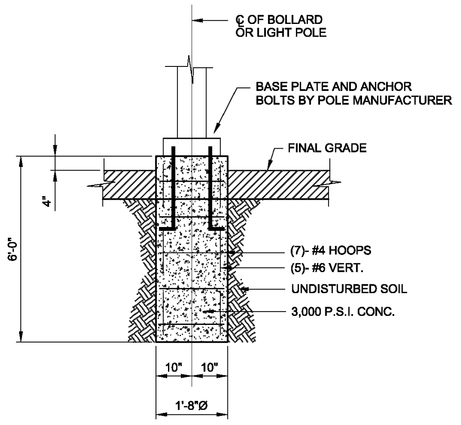


## 9 LIGHT POLE DETAIL

C4 | C6 N.T.S.

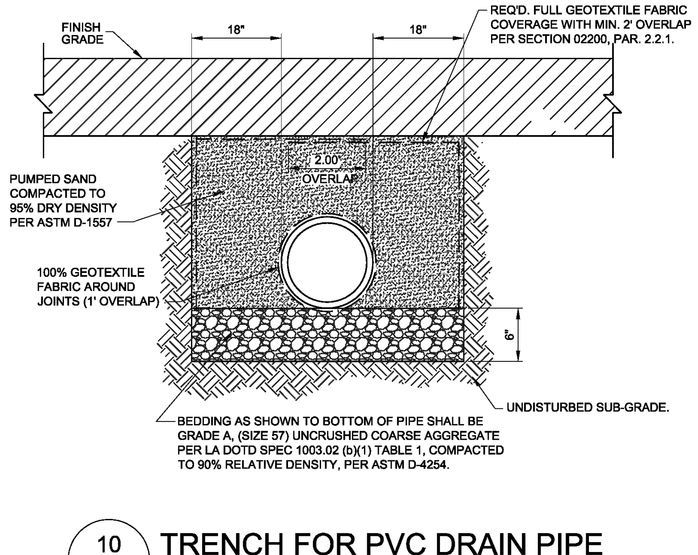


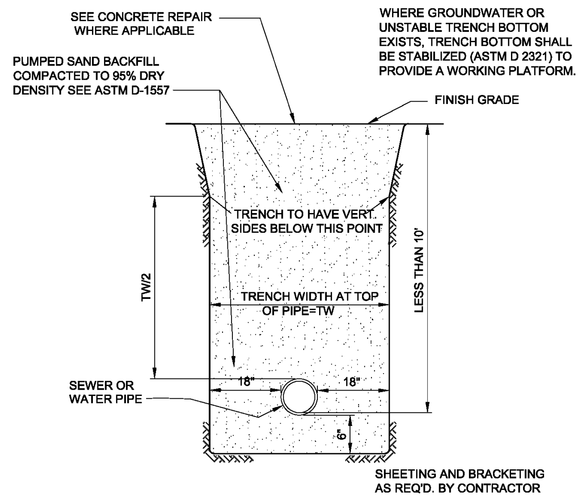


NOTE:

WHERE GROUNDWATER OR UNSTABLE TRENCH BOTTOM EXISTS, TRENCH BOTTOM SHALL BE STABILIZED (ASTM D 2321) TO PROVIDE A WORKING PLATFORM.

## 10 TRENCH FOR PVC DRAIN PIPE

C4 | C6 N.T.S.

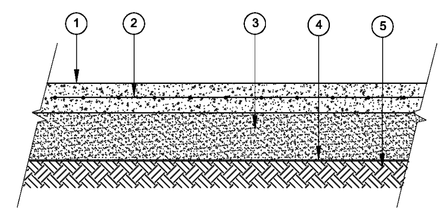


1. 8" THICK, 4000 PSI PORTLAND CEMENT CONCRETE.
2. 4x4 W6 x W6 WELDED WIRE FABRIC.
3. 12" MIN. THICKNESS "PUMPED" SAND FILL COMPACTED TO MIN. 95% OF THE MAXIMUM DRY DENSITY AT OPTIMUM MOISTURE CONTENT. PER ASTM D-698.
4. GEOTEXTILE FABRIC (NON-WOVEN ) PLACED DIRECTLY OVER PREPARED SUBGRADE. FABRIC SHALL COMPLY WITH LA. D.O.T.D. STANDARD SPEC. SECTION 1019 (2006 EDITION OR LATEST EDITION).
5. PROOF ROLL NATURAL SUBGRADE.

## 12 HEAVY-DUTY CONC. PAVEMENT

C2 | C6 N.T.S.

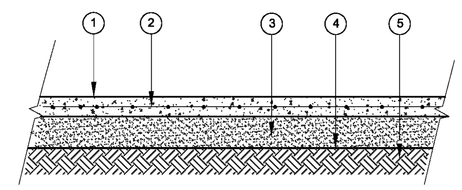


1. 6" THICK, 4000 PSI PORTLAND CEMENT CONCRETE.
2. 6x6 W7.5 x W6.5 WELDED WIRE FABRIC.
3. 12" MIN. THICKNESS "PUMPED" SAND FILL COMPACTED TO MIN. 95% OF THE MAXIMUM DRY DENSITY AT OPTIMUM MOISTURE CONTENT PER ASTM D-698.
4. GEOTEXTILE FABRIC (NON-WOVEN) PLACED DIRECTLY OVER PREPARED SUBGRADE. FABRIC SHALL COMPLY WITH LA. D.O.T.D. STANDARD SPEC. SECTION 1019 (2006 EDITION OR LATEST EDITION).
5. PROOF ROLL NATURAL SUBGRADE.

## 13 LIGHT-DUTY CONC. PAVEMENT

C2 | C6 N.T.S.

## 11 SANITARY SEWER AND WATERLINE TRENCH

C4 | C6 N.T.S.

NOTES:

1. HANSON PRECAST SHOULDER DRAIN OR APPROVED EQUAL.
2. CONCRETE: 4000 PSI, 28 COMPRESSIVE STRENGHT.
3. REINFORCING STEEL: ASTM A-615, GRADE 60
4. REINFORCING TO MEET AASHTO HS20-44 LOADING.
5. PRECAST STRUCTURE TO MEET ASTM C-857-92.
6. JOINT SEALANT - RAM-NEK GASKET MATERIAL.

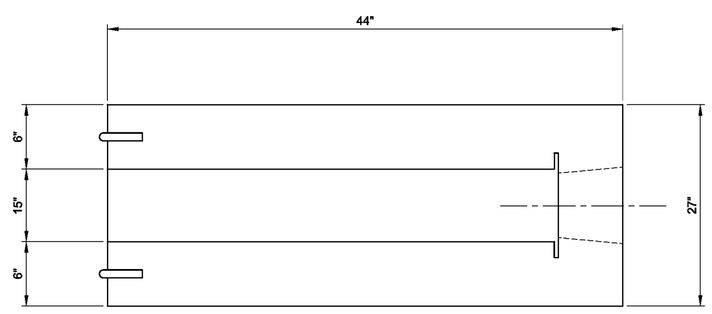


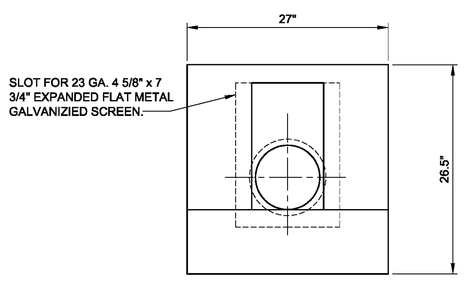


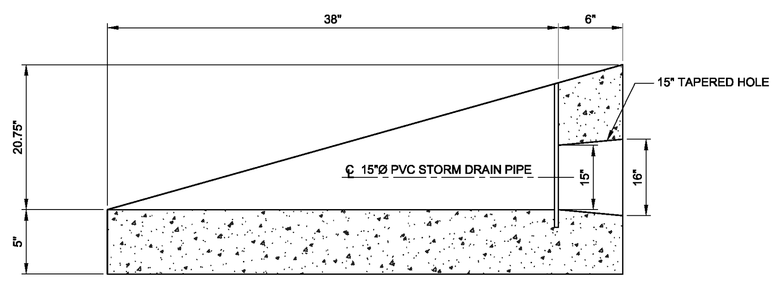


## 14 HANSON PRECAST DRAINAGE STRUCTURE SAFTY END TYPE 1, 15", 3:1

C4 | C6 N.T.S.

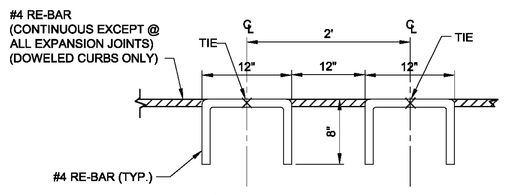


NOTE:
CURBS TO HAVE JOINTS AT 20' MAXIMUM INTERVALS SHOWING DIMENSIONS AND SPACING OF #4 BARS FOR CONC. CURB

BAR DETAIL

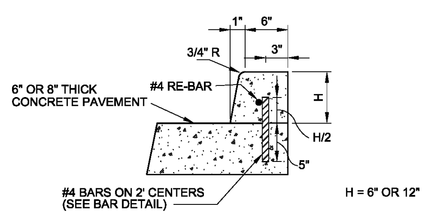


## 15 DOWELED BARRIER CURB

C2 | C6 N.T.S.

TABLE 1

| ALL DIMENSIONS IN INCHES | | | | | | | | | | | |
|---|---|---|---|---|---|---|---|---|---|---|---|
| PAVEMENT THICKNESS | SMOOTH DOWELL BARS | | | DEF. TIE BARS | | | DEPTH OF JOINT | | LCJ KEYWAY | | |
| T | SIZE | LENGTH | SPACING | SIZE | LENGTH | SPACING | TCJ & CJ ±1/4" | LJ ±1/4" | A ±1/4" | B ±1/4" | |
| 7" OR LESS | 1 | 18 | 12 | 1/2 | 24 | 36 | 2 | 2 1/2 | 1 1/2 | 3/4 | |
| 8 | 1 1/8 | 18 | 12 | 5/8 | 30 | 36 | 2 1/2 | 3 | 2 1/2 | 1 1/4 | |

NOTE:
GEOTEXTILE FABRIC PLACED DIRECTLY OVER PREPARED SUBGRADE. FABRIC SHALL COMPLY WITH LA. D.O.T.D. STANDARD SPEC. SECTION 1019 (2006 EDITION OR LATEST EDITION)

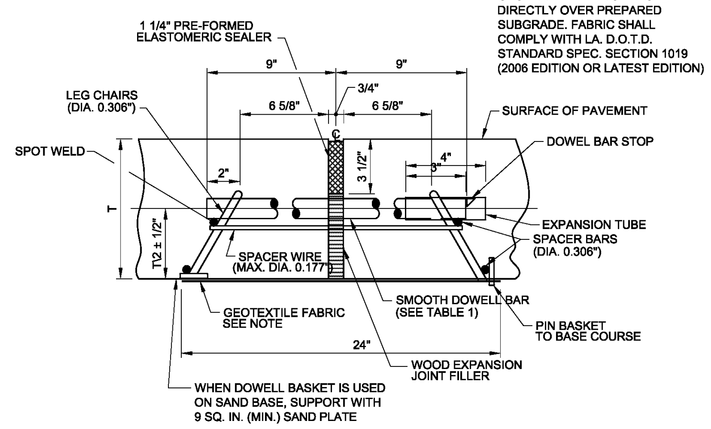


## 16 TYPE EJ CONSTRUCTION JOINT

C3 | C6 N.T.S.


SCHRENK AND PETERSON
CONSULTING ENGINEERS, INC.
4141 BIENVILLE AVE.
NEW ORLEANS, LA 70119
PHONE: 504.482.7856
FAX: 504.482.7325
www.schrenkandpeterson.com

SIZELER THOMPSON BROWN ARCHITECTS
PROJECT DESIGN GROUP
300 LAFAYETTE STREET, SUITE 200
NEW ORLEANS, LOUISIANA 70130
(504) 523-6472 FAX (504) 529-1181


Revisions

| No. | Description | Date |
|---|---|---|
| | | |

JEFFERSON PARISH SHERIFF'S OFFICE
FOURTH DISTRICT SUBSTATION
METAIRIE, LOUISIANA 70003

MISC. DETAILS

| seal | file name | drawing number |
|---|---|---|
| | 5504CD00-C5_7· | C6 |
| | project number 5585 | |
| | date 02-18-10 | |
| | phase CD | |

FKH NAME: 5585-00-C5_7.dwg DATE: FEB 05, 2010 TIME: 3:55 PM