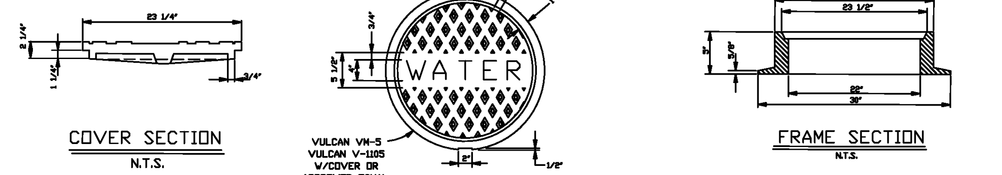

COVER SECTION
N.T.S.

FRAME COVER
N.T.S.

FRAME SECTION
N.T.S.

MANHOLE COVER
N.T.S.

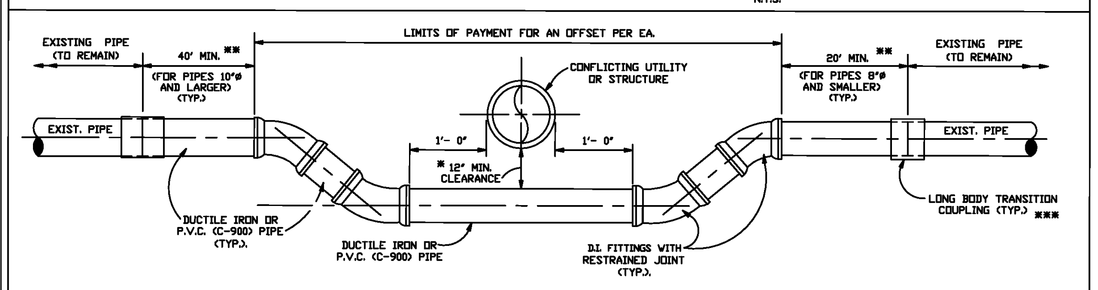

TYPICAL VERTICAL OR HORIZONTAL OFFSET DETAILS
FOR WATER AND SEWER FORCE MAINS
N.T.S.

*18" MIN. CLEARANCE BETWEEN SANITARY SEWER LINES AND WATER LINES.
**TO BE PAID FOR PER LIN. FT. OF PIPE.
***TO BE PAID FOR PER EACH.

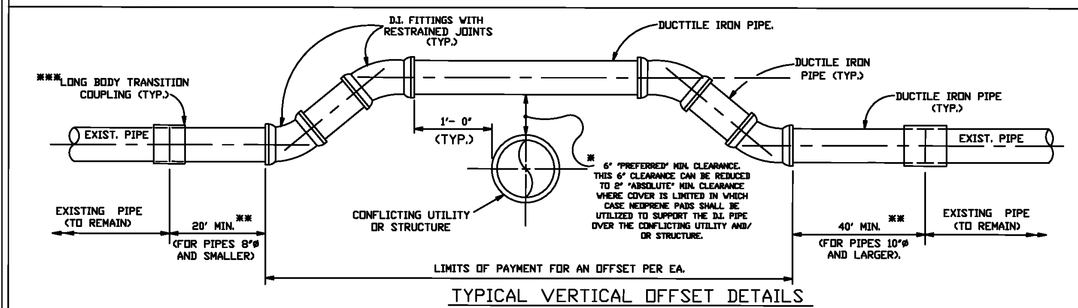

TYPICAL VERTICAL OFFSET DETAILS
FOR WATER AND SEWER FORCE MAINS.
N.T.S.

*18" MIN. CLEARANCE BETWEEN SANITARY SEWER LINES AND WATER LINES.
**TO BE PAID FOR PER LIN. FT. OF PIPE.
***TO BE PAID FOR PER EACH.

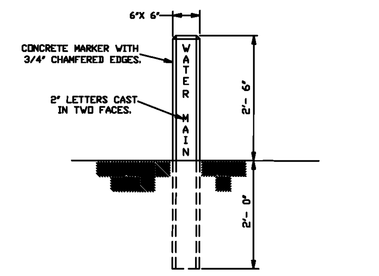

MARKER FOR WATER MAINS 14" AND ABOVE
N.T.S.

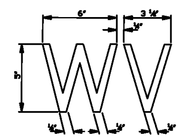

TO BE PLACED IN FACE OF NEW CURB AT EVERY VALVE.

VALVE MARKER
N.T.S.

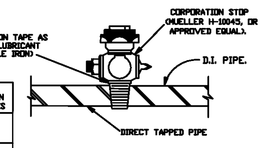

NORMAL PIPE SIZE, INCHES	SIZE OF CORPORATION STOP, INCHES
16" AND SMALLER	1
16" THROUGH 36"	2
LARGER THAN 36"	3

TYPICAL AIR VALVE INSTALLATION
N.T.S.

*USE OF TIE-RODS SHALL BE LIMITED AND SUBJECT TO JEFFERSON PARISH DEPARTMENT OF ENGINEERING APPROVAL.

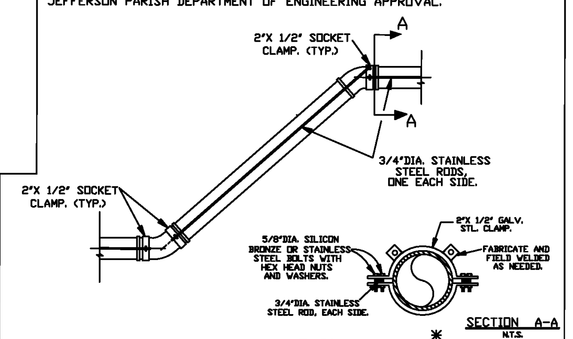

TIE-ROD DETAILS*
N.T.S.

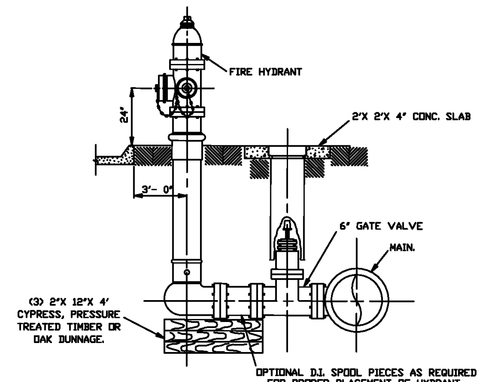

FIRE HYDRANT ASSEMBLY DETAIL
N.T.S.

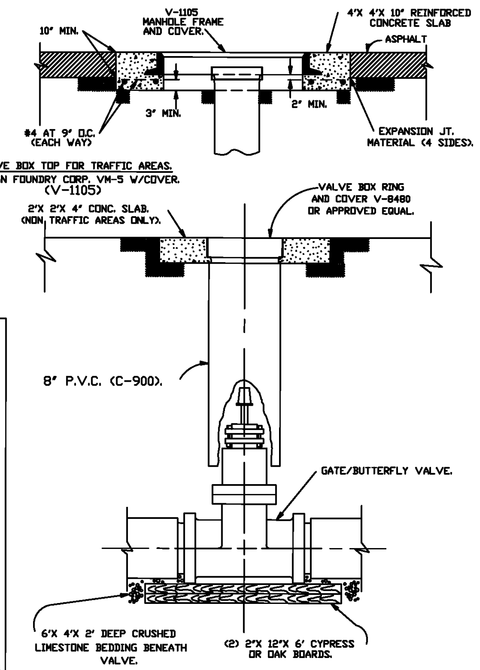

VALVE BOX DETAIL
N.T.S.

MIN. COVER	PIPE SIZE (IN.)
3 FT.	8-10
4 FT.	>,12

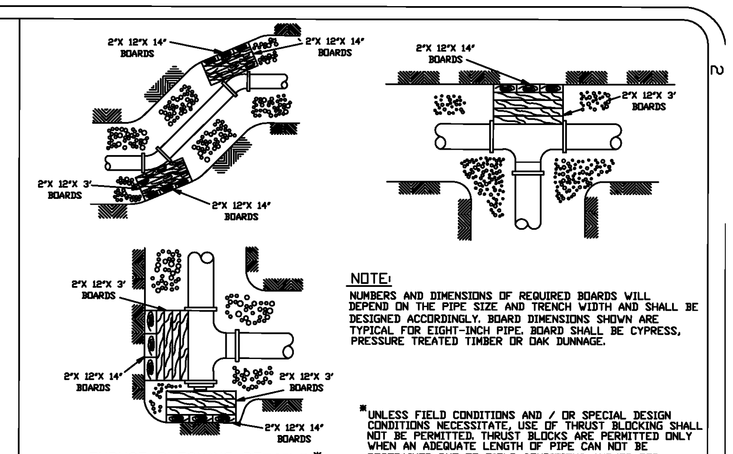

THRUST BLOCKING DETAILS*
N.T.S.

NOTE:
NUMBERS AND DIMENSIONS OF REQUIRED BOARDS WILL DEPEND ON THE PIPE SIZE AND TRENCH WIDTH AND SHALL BE DESIGNED ACCORDINGLY. BOARD DIMENSIONS SHOWN ARE TYPICAL FOR EIGHT-INCH PIPE. BOARD SHALL BE CYPRESS, PRESSURE TREATED TIMBER OR OAK DUNNAGE.

*UNLESS FIELD CONDITIONS AND / OR SPECIAL DESIGN CONDITIONS NECESSITATE, USE OF THRUST BLOCKING SHALL NOT BE PERMITTED. THRUST BLOCKS ARE PERMITTED ONLY WHEN AN ADEQUATE LENGTH OF PIPE CAN NOT BE RESTRAINED DUE TO FIELD CONDITIONS AND/OR FOR TEMPORARY CONSTRUCTION.

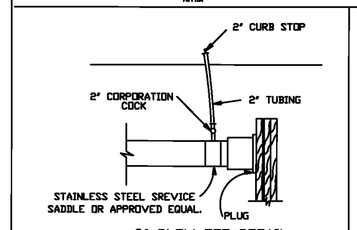

2" BLOW-OFF DETAIL

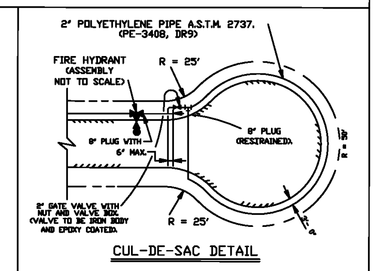

CUL-DE-SAC DETAIL

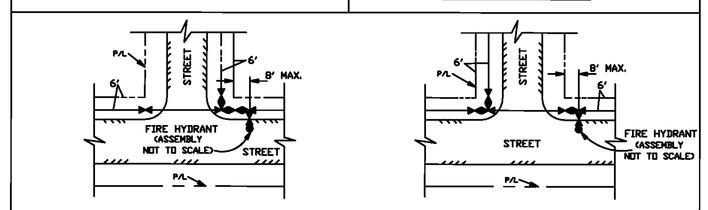

TYPICAL FIRE HYDRANT AND VALVE LOCATIONS AT INTERSECTIONS
N.T.S.

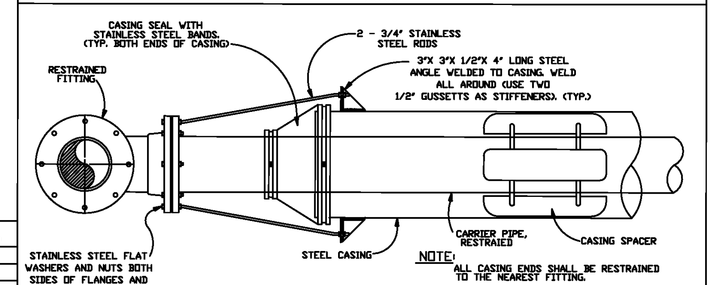

NOTE:
ALL CASING ENDS SHALL BE RESTRAINED TO THE NEAREST FITTING.

CASING RESTRAINT DETAIL
N.T.S.

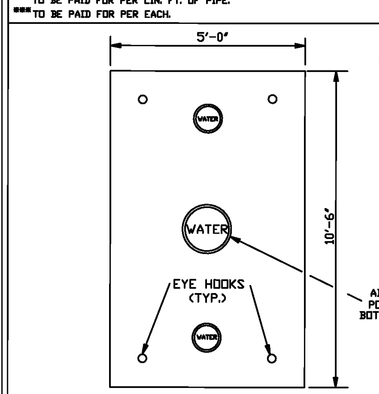

TOP VIEW
N.T.S.

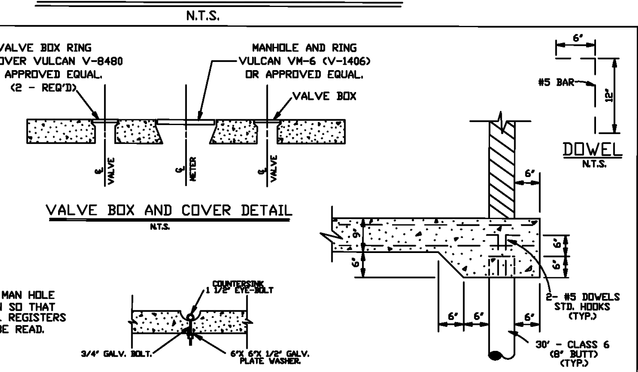

VALVE BOX AND COVER DETAIL
N.T.S.

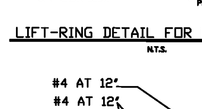

LIFT-RING DETAIL FOR EYE-HOOKS
N.T.S.

CORNER DETAIL WHERE PILE REQUIRED
N.T.S.

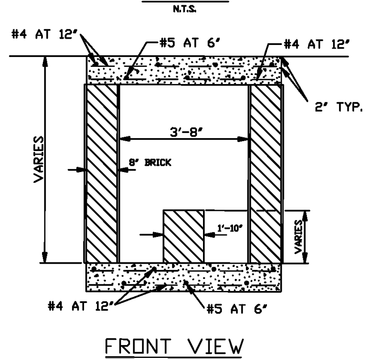

FRONT VIEW
N.T.S.

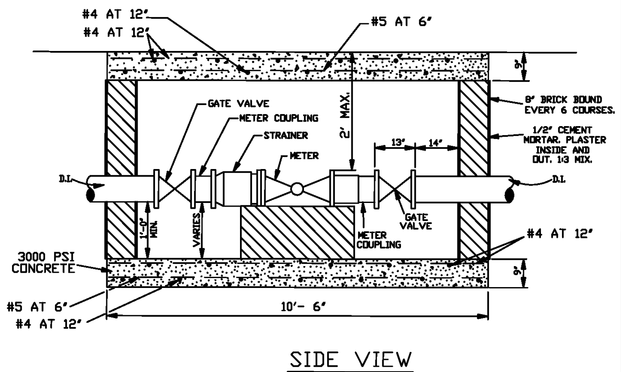

SIDE VIEW
N.T.S.

BOX FOR 6" AND LARGER METERS

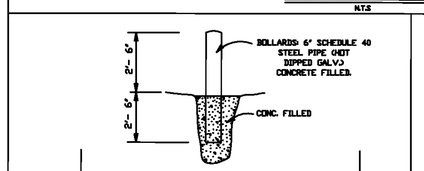

SECTION "A - A"
N.T.S.

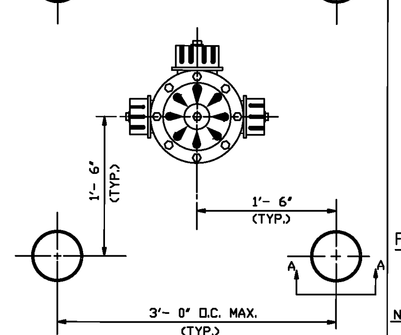

BOLLARDS FOR FIRE HYDRANTS
TO PROTECT FROM TRAFFIC
N.T.S.

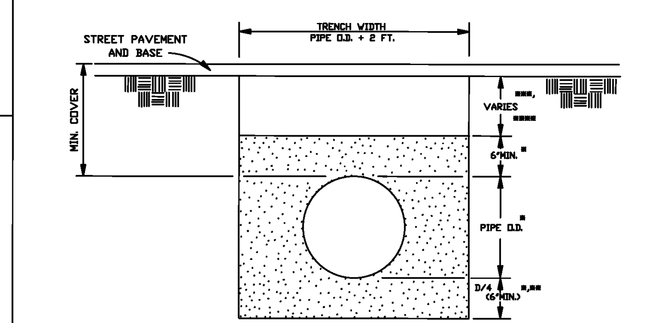

WATER MAIN STANDARD TRENCH DETAIL
FOR D.I., PVC-900, PVC-C905 AND HDPE(MIN.THICKNESS, DR.11) PIPES
N.T.S.

NOTES:
* COMPACTED SAND, ASTM 2321 CLASS II (SW OR SP) MIN. DENSITY 90% STANDARD PROCTOR (ASTM D698) 6" MAX. LAYERS.
** PROVIDE BELL HOLES AT EACH JOINT.
*** SELECT EXCAVATED MATERIAL FREE OF STUMPS, DEBRIS AND VOIDS FOR NON-PAVED AREA.
**** RIVER SAND WITHIN THE STREETS RIGHT-OF-WAY MIN. DENSITY 95% STANDARD PROCTOR (ASTM D698)

NOTES:
1. WHERE GROUND WATER OR UNSTABLE TRENCH BOTTOM EXISTS, TRENCH BOTTOM SHALL BE STABILIZED (ASTM 2321) TO PROVIDE A WORKING PLATFORM.
2. TRENCH DETAIL SHOWN WILL BE MIN. REQUIREMENTS TO SAFEGUARD THE INTEGRITY OF THE WATER LINE INSTALLATION AT HEREIN-SPECIFIED DEPTHS. THE CONTRACTOR SHALL PROVIDE SUFFICIENT SHEETING AND BRACING TO PROVIDE SAFE WORKING CONDITIONS FOR HIS WORKMEN.

LEGEND:

EXISTING	PROPOSED	DESCRIPTION
		TEE, VALVE AND FIRE HYDRANT ASSEMBLY. (FLANGED OR RESTRAINED MECHANICAL JOINT)
		GATE VALVE.
		BUTTERFLY VALVE.
		CROSS.
		TEE.
		TAPPING SLEEVE AND VALVE.
		REDUCER.
		BEND

JEFFERSON PARISH
DEPARTMENT OF ENGINEERING

DRAWING TITLE: WATER STANDARD DETAILS

DRAWN BY: H.J.W.	DATED: 05/21/96	REVISED BY: H.J.W.	DATED: 02/20/03		
REVISED BY: P.D.	DATED: 02/09/04	DWF TO AUTOCAD BY: H.J.W.	DATED: 02/11/04		
REVISED BY: J.L.	DATED: 03/12/07	CHECKED BY: R.M.	DATED: 03/12/07		
REVISED BY: –	DATED: –	REVISED BY: –	DATED: –		
USED: AUTOCAD LT. 2004		VER: WATER1.DWG			
FILE NUMBER: 1746D					

ORIGINAL 05/21/96

SHEET NO. 1 OF 2

SCHRENK AND PETERSON
CONSULTING ENGINEERS, INC.
4141 BIENVILLE AVE.
NEW ORLEANS, LA 70119
PHONE: 504.482.7856
FAX: 504.482.7325
www.schrenkandpeterson.com

SIZELER THOMPSON BROWN ARCHITECTS
PROJECT DESIGN GROUP
300 LAFAYETTE STREET, SUITE 200
NEW ORLEANS, LOUISIANA 70130
(504) 523-6472 FAX (504) 529-1181

Revisions

No.	Description	Date

JEFFERSON PARISH SHERIFF'S OFFICE
FOURTH DISTRICT SUBSTATION
METAIRIE, LOUISIANA 70003

JEFF. PARISH WATER STANDARD DETAILS

seal	file name	drawing number
	5585-CD-C9.dwg	C9
	project number: 5585	
	date: 02-18-10	
	phase: CD	

FKH NAME: 5585-CD-C9.dwg DATE: FEB 10, 2010 TIME: 11:21 AM