DIAGRAM NOTE:

PURPOSE OF THIS DIAGRAM IS TO SHOW THE DISTRIBUTION TOPOLOGY OF THE DATA AND TELEPHONE NETWORKS. THE CONTRACTOR IS RESPONSIBLE FOR ALL QUANTITIES OF LIU'S, SWITCHES, PATCH PANELS, TERMINAL BLOCKS, LIGHTNING PROTECTORS, AND STATIONS TO PROVIDE DATA AND TELEPHONE TO ALL STATIONS SHOWN ON THE PLANS. SEE PLANS FOR CONDUIT SIZE REQUIREMENTS. EACH DATA AND TELEPHONE DEVICE SHOWN SHALL HAVE WIRING AND JACKS FOR 1 CONNECTION EACH, AND DATA/TELEPHONE DEVICES SHOWN SHALL HAVE WIRING AND JACKS FOR 2 CONNECTIONS (1 EACH).

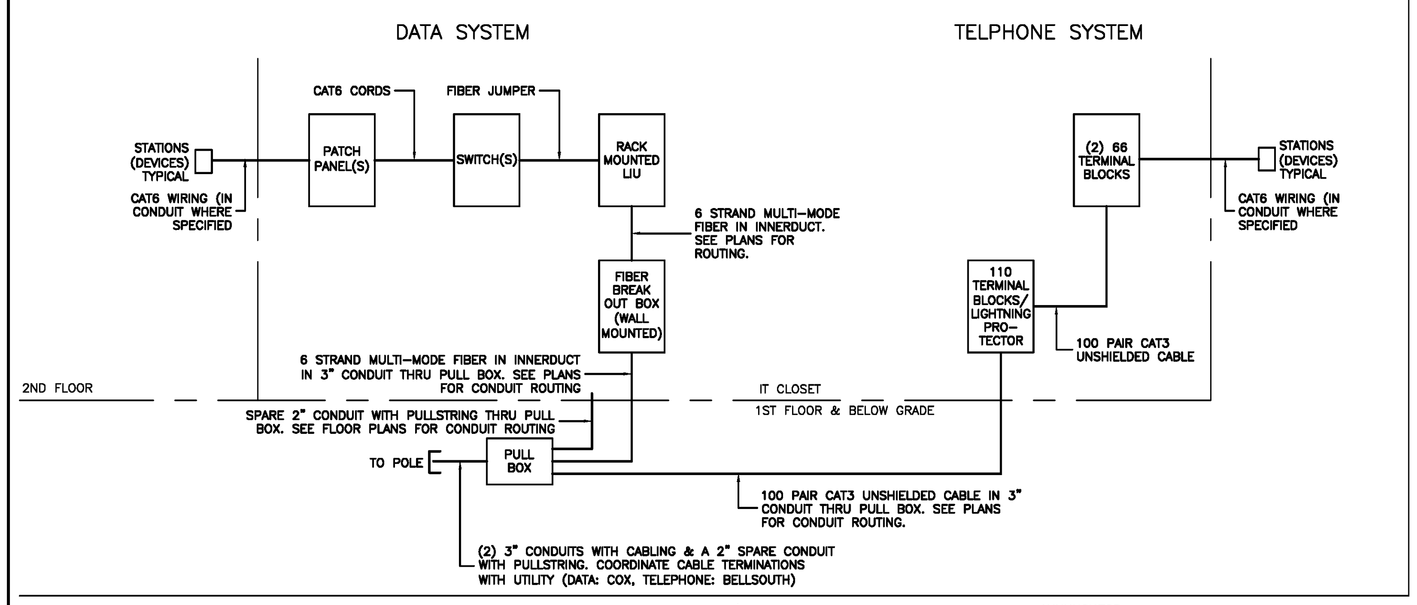

FEEDER SCHEDULE

TYPE THHN/THWN INSUL. COPPER CONDUCTOR AMPACITY BASED ON (75° TEMP. RATING) IN RIGID METAL CONDUIT
DRY INTERIOR LOCATIONS: EMT WITH STEEL SET SCREW FITTINGS
WET EXTERIOR LOCATIONS: RGS WITH CAST FITTINGS
UNDERGROUND INSTALLATIONS: SCHEDULE 40 PVC WITH SCHEDULE 80 PVC AT TURN UP LOCATIONS
FEEDER DESIGNATION (____1/2 N) DENOTES 1/2 SIZE NEUTRAL

C.B.	FEEDER DESIGNATION	3PH+G: PHASE + GROUND CONDUCTORS AND CONDUIT SIZE 1PH+G: PHASE + NEUTRAL + GROUND CONDUCTOR AND CONDUIT SIZE	FEEDER DESIGNATION	3PH+G: PHASE + NEUTRAL + GROUND CONDUCTORS AND CONDUIT SIZE
20	20	3#12+#12 GND., 1/2"C	20N	4#12+#12 GND., 1/2"C
30	30	3#10+#10 GND., 3/4"C	30N	4#10+#10 GND., 3/4"C
50	50	3#8+#10 GND., 3/4"C	50N	4#8+#10 GND., 3/4"C
60/70	65	3#6+#8 GND., 1"C	65N	4#6+#8 GND., 1"C
80/90	85	3#4+#8 GND., 1 1/4"C	85N	4#4+#8 GND., 1 1/4"C
100	100	3#3+#8 GND., 1 1/4"C	100N	4#3+#8 GND., 1 1/4"C
110/125	115	3#2+#6 GND., 1 1/4"C	115N	4#2+#6 GND., 1 1/4"C
125/150	130	3#1+#6 GND., 1 1/2"C	130N	4#1+#6 GND., 1 1/2"C
150	150	3#1/0+#6 GND., 1 1/2"C	150N	4#1/0+#6 GND., 2"C
175	175	3#2/0+#6 GND., 2"C	175N	4#2/0+#6 GND., 2"C
200	200	3#3/0+#6 GND., 2"C	200N	4#3/0+#6 GND., 2"C
225/250	230	3#4/0+#4 GND., 2"C	230N	4#4/0+#4 GND., 2 1/2"C
250/300	255	3#250+#4 GND., 2 1/2"C	255N	4#250+#4 GND., 2 1/2"C
250/300	285	3#300+#4 GND., 2 1/2"C	285N	4#300+#4 GND., 3"C
300/350	310	3#350+#3 GND., 3"C	310N	4#350+#3 GND., 3"C
300/350	335	3#400+#3 GND., 3"C	335N	4#400+#3 GND., 3"C
350/400	380	3#500+#3 GND., 3"C	380N	4#500+#3 GND., 3 1/2"C
400	400	2 SETS(3#3/0+#3 GND., 2"C)	400N	2 SETS(4#3/0+#3 GND., 2"C)
400/450	420	3#600+#2 GND., 3 1/2"C	420N	4#600+#2 GND., 4"C
450/500	460	2 SETS(3#4/0+#2 GND., 2"C)	460N	2 SETS(4#4/0+#2 GND., 2 1/2"C)
500/600	510	2 SETS(3#250+#1 GND., 2 1/2"C)	510N	2 SETS(4#250+#1 GND., 2 1/2"C)
600/700	570	2 SETS(3#300+#4 GND., 2 1/2"C)	570N	2 SETS(4#300+#4 GND., 3"C)
600/700	620	2 SETS(3#350+#1/0 GND., 3"C)	620N	2 SETS(4#350+#1/0 GND., 3"C)
700/800	760	2 SETS(3#500+#1/0 GND., 3"C)	760N	2 SETS(4#500+#1/0 GND., 3 1/2"C)
800	840	2 SETS(3#600+#2/0 GND., 3 1/2"C)	840N	2 SETS(4#600+#2/0 GND., 4"C)
800	855	3 SETS(3#300+#2/0 GND., 2 1/2"C)	855N	3 SETS(4#300+#2/0 GND., 3"C)
800	1000	3 SETS(3#400+#2/0 GND., 3"C)	1000N	3 SETS(4#400+#2/0 GND., 3"C)

SHEET NOTES (SHEET E501 ONLY):

1. SEE MECHANICAL DRAWINGS FOR LOCATIONS OF VAVS AND WATER HEATER.
2. THE GENERATOR AND THE ATS SHALL BE FURNISHED BY THE OWNER AND INSTALLED BY THE CONTRACTOR. AS PART OF THE GENERATOR AND ATS INSTALLATION, THE CONTRACTOR SHALL INCLUDE ALL WORK, PARTS, AND EQUIPMENT ASSOCIATED WITH MOVING THE GENERATOR AND ATS FROM THE SITE TO THE PLATFORM, ATTACHING THE GENERATOR AND ATS TO THE PLATFORM, COORDINATING WITH THE GENERATOR MANUFACTURER, TESTING THE GENERATOR (INCLUDING FUEL FOR DURING TESTING), AND A FULL TANK OF DIESEL UPON PROJECT COMPLETION. THE GENERATOR INSTALLATION COSTS SHALL BE BASED OFF INSTALLING A GENERATOR AND ATS THAT MEETS ALL REQUIREMENTS SPECIFIED IN SECTION 16231, SECTION 16415, AND GENERATOR ENCLOSURE/TANK REQUIREMENTS ON THIS SHEET.

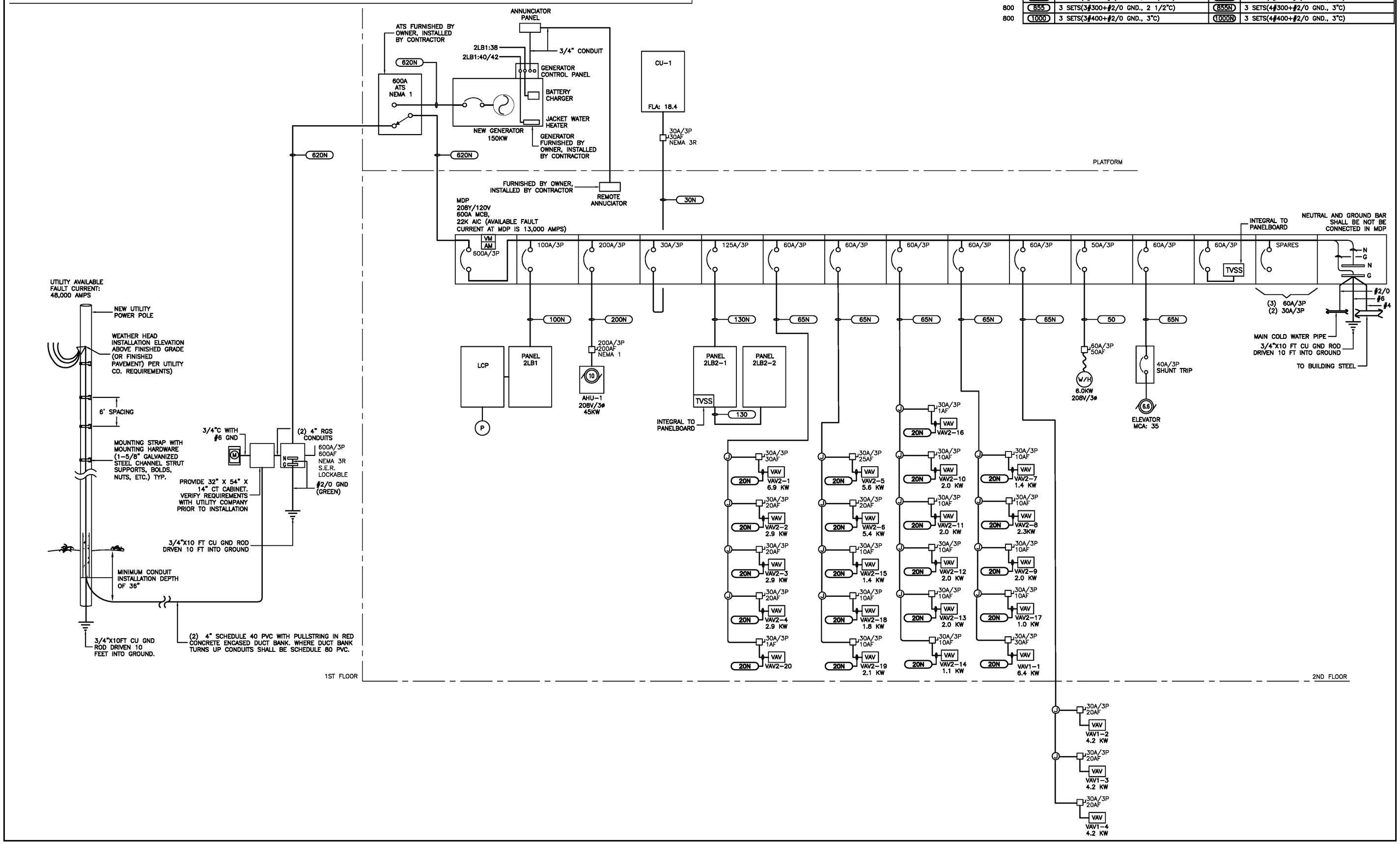

HUSEMAN & Associates
3925 N I-10 SERVICE RD
SUITE 2018
METAIRIE, LA 70002
(504) 456-3119
FAX (504) 456-3122
MECHANICAL ■ ELECTRICAL ■ PLUMBING ■ FIRE PROTECTION
Job No. 0900603 Drawn By AC Designed By AC Checked By JC

SIZELER THOMPSON BROWN ARCHITECTS
REGIONAL DESIGN GROUP, LLC
300 LAFAYETTE STREET, SUITE 200
NEW ORLEANS, LOUISIANA 70130
(504) 523-6472 FAX (504) 529-1181

revisions		
no.	revision	date
1		
2		
3		
4		
5		

JEFFERSON PARISH SHERIFF'S OFFICE
4TH DISTRICT SUBSTATION

JEFFERSON PARISH, LOUISIANA

ELECTRICAL ONE LINE DIAGRAM

seal	file name	drawing number
	0900603E500	E501
	project number: 51122.03	
	date: 02-04-10	
	phase: CD	