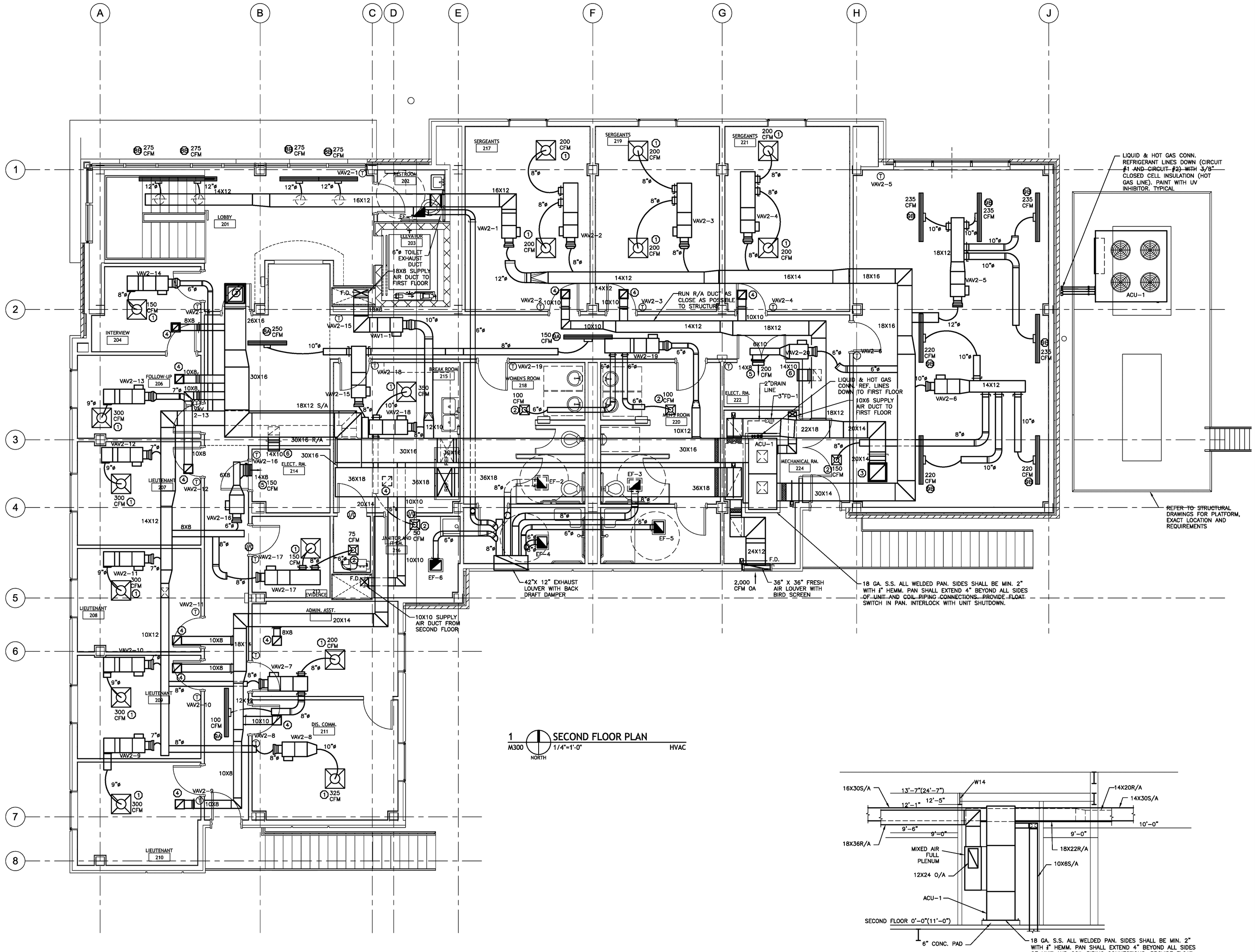


1 SECOND FLOOR PLAN
M300 1/4"=1'-0" HVAC
NORTH

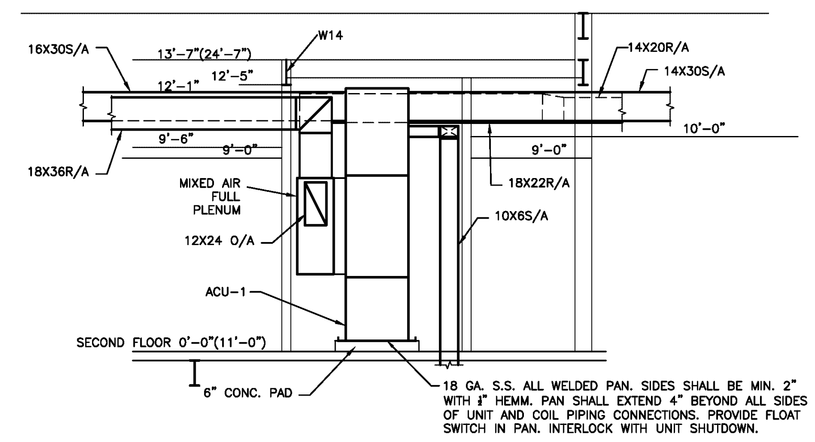


## ACU-1 DETAIL
SCALE: 1/4" = 1'-0"


HUSEMAN & Associates
3925 N I-10 SERVICE RD
SUITE 201B
METAIRIE, LA 70002
(504) 456-3119
FAX (504) 456-3122
MECHANICAL ■ ELECTRICAL ■ PLUMBING ■ FIRE PROTECTION
Job No. 0900603 Drawn By MP Designed By JL Checked By CWB

SIZELER THOMPSON BROWN ARCHITECTS
REGIONAL DESIGN GROUP, LLC
300 LAFAYETTE STREET, SUITE 200
NEW ORLEANS, LOUISIANA 70130
(504) 523-6472 FAX (504) 529-1181


| revisions | | |
|---|---|---|
| no. | revision | date |
| 1 | | |
| 2 | | |
| 3 | | |
| 4 | | |
| 5 | | |

JEFFERSON PARISH SHERIFF'S OFFICE
4TH DISTRICT SUBSTATION
JEFFERSON PARISH, LOUISIANA

SECOND FLOOR PLAN - HVAC

| seal | file name | drawing number |
|---|---|---|
| | 0900601M100.dwg | M300 |
| | project number 51122.03 | |
| | date 10-07-09 | |
| | phase CD | |