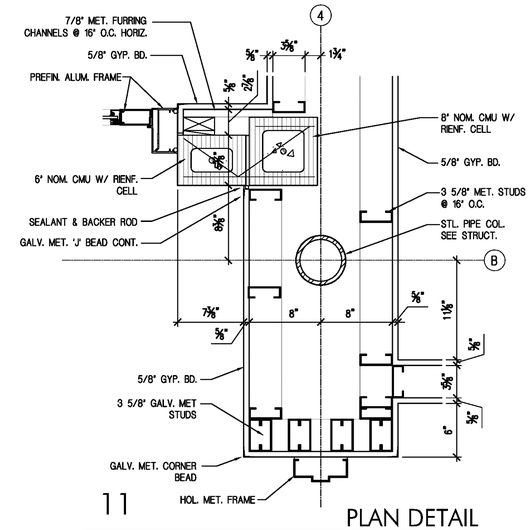

11 PLAN DETAIL

A201 | A801 1 1/2" = 1' - 0"

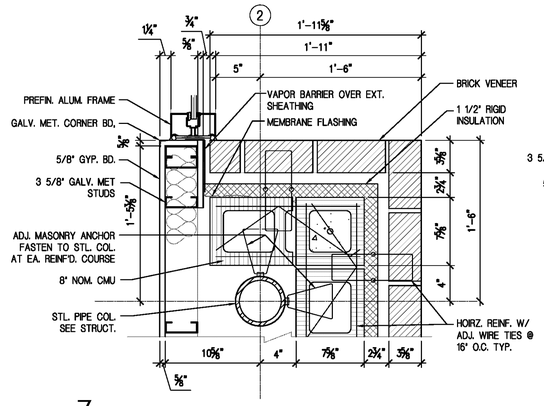

7 EXTERIOR PLAN DETAIL

A201 | A801 1 1/2" = 1' - 0"

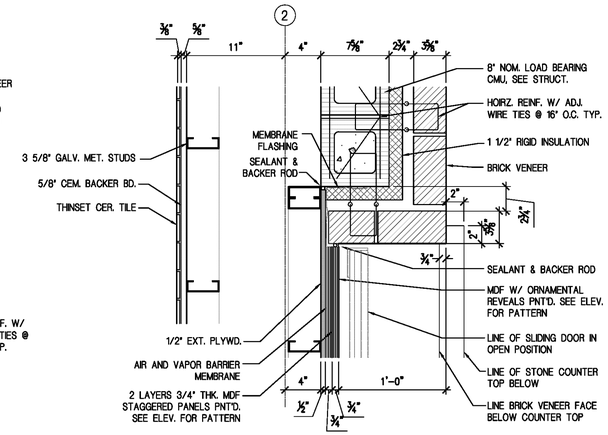

4 EXTERIOR PLAN DETAIL

A201 | A801 1 1/2" = 1' - 0"

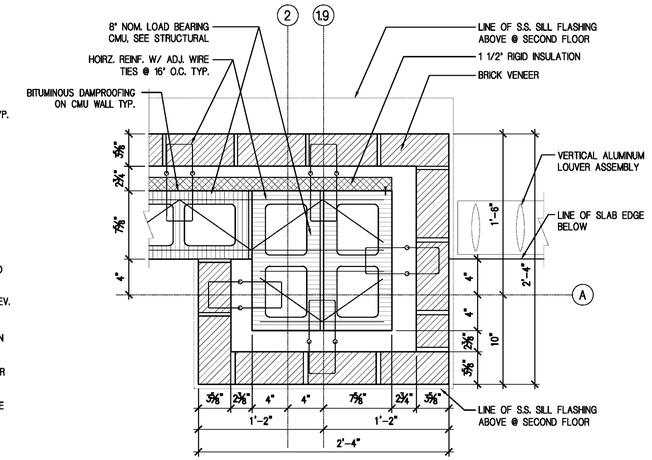

1 EXTERIOR PLAN DETAIL

A201 | A801 1 1/2" = 1' - 0"

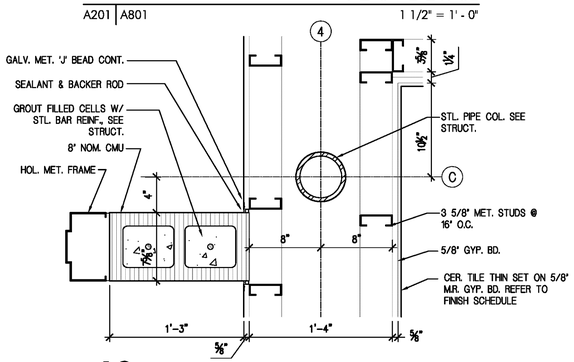

12 PLAN DETAIL

A201 | A801 1 1/2" = 1' - 0"

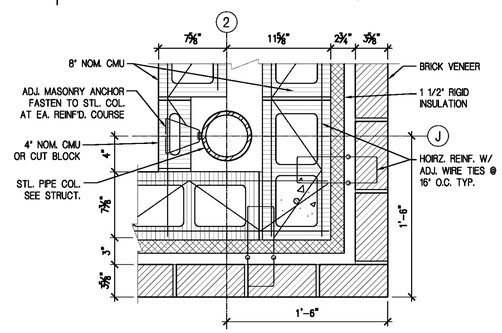

8 EXTERIOR PLAN DETAIL

A201 | A801 1 1/2" = 1' - 0"

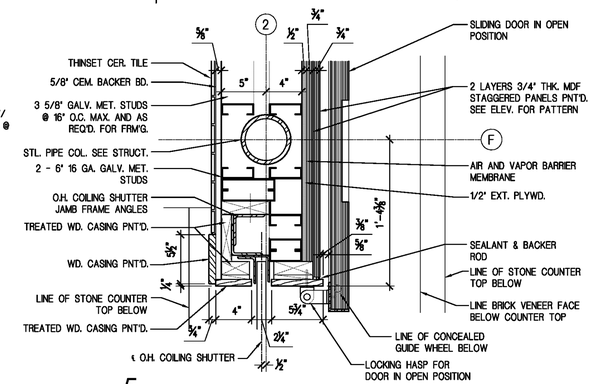

5 EXTERIOR PLAN DETAIL

A201 | A801 1 1/2" = 1' - 0"

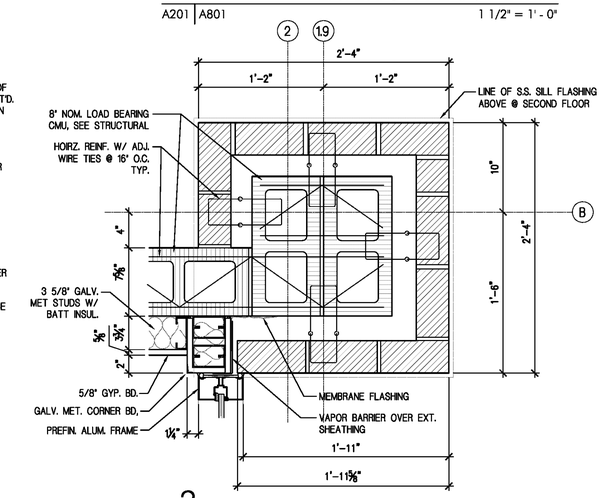

2 EXTERIOR PLAN DETAIL

A201 | A801 1 1/2" = 1' - 0"

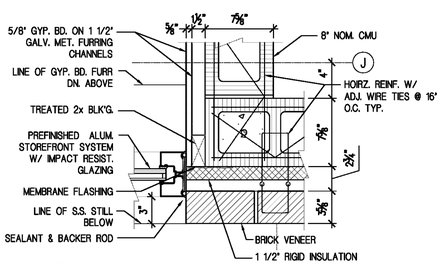

13 EXTERIOR PLAN DETAIL

A201 | A801 1 1/2" = 1' - 0"

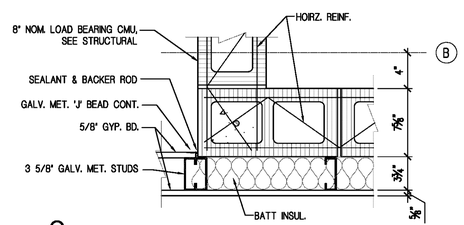

9 PLAN DETAIL

A201 | A801 1 1/2" = 1' - 0"

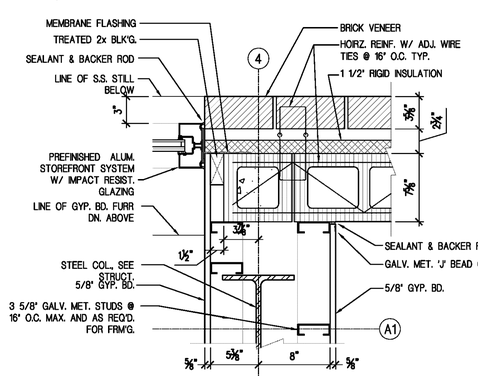

10 EXTERIOR PLAN DETAIL

A201 | A801 1 1/2" = 1' - 0"

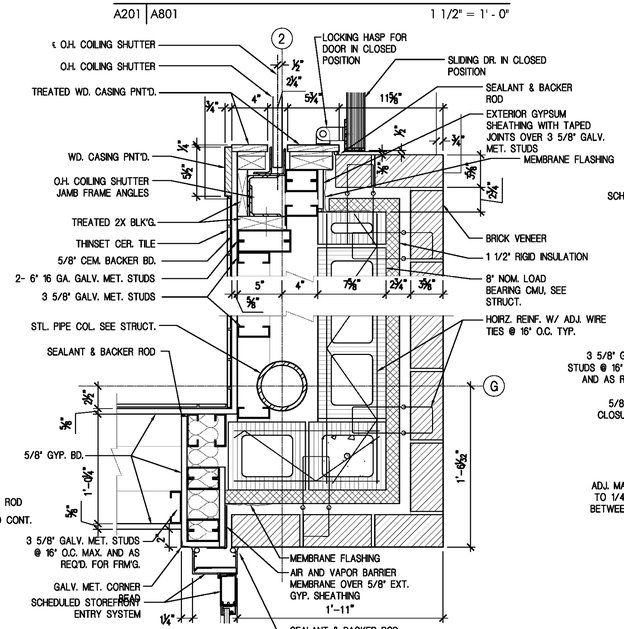

6 EXTERIOR PLAN DETAIL

A201 | A801 1 1/2" = 1' - 0"

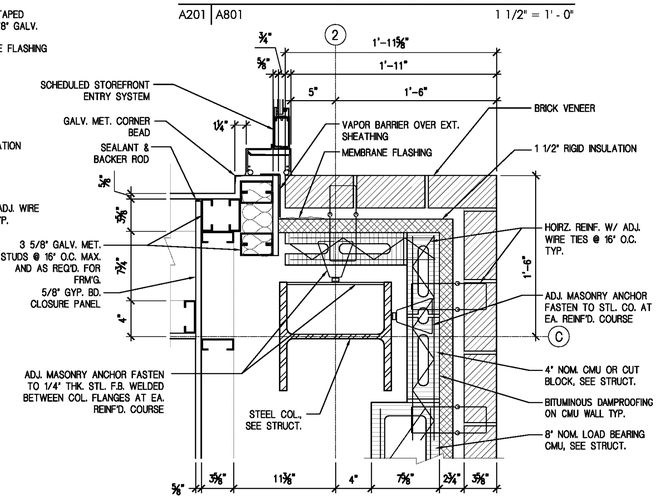

3 EXTERIOR PLAN DETAIL

A201 | A801 1 1/2" = 1' - 0"

Waggonner & Ball Architects
2200 PRYTANIA STREET
NEW ORLEANS, LOUISIANA 70130
T 504.524.5308 F 504.524.5314
wbarchitects.com

COPYRIGHT © 2009 by Waggonner & Ball Architects, APC.
All rights reserved. No part of this work covered by the copyright hereon may be reproduced or used in any form or by any means - graphic, electronic or mechanical, including photocopying, recording, taping or information storage and retrieval systems - without written permission of the copyright holder.

ACADEMY OF THE SACRED HEART PHASE 2
New Arts and Athletics Facility

4501 CARONDELET ST.
NEW ORLEANS, LOUISIANA 70115

PROJECT NO.: 0209-20

SHEET TITLE:
PLAN DETAILS
NEW BUILDING

DATE: JAN 08, 2010
DRAWN BY: MP
REVISION:

J. DAVID WAGGONNER III
Reg. No. 2587
STATE OF LOUISIANA
REGISTERED ARCHITECT

A801