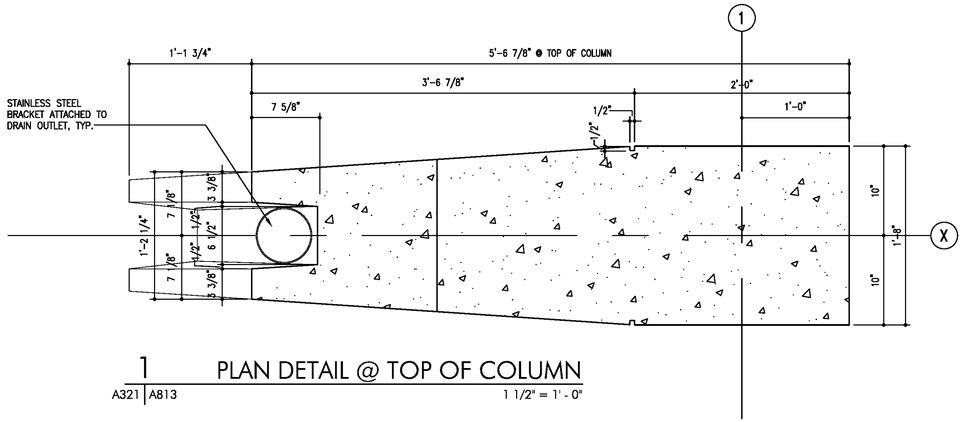

1 PLAN DETAIL @ TOP OF COLUMN

A321 | A813 1 1/2" = 1' - 0"

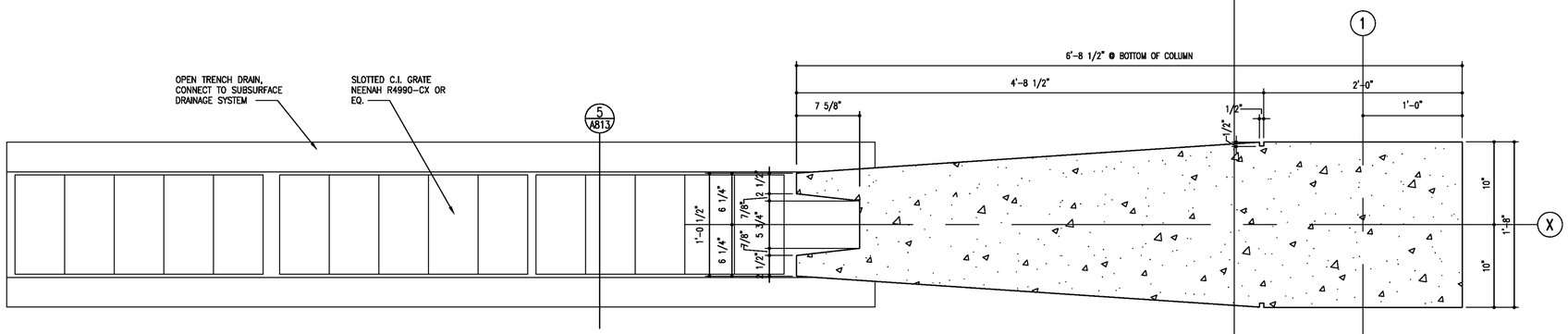

2 PLAN DETAIL @ BOTTOM OF COLUMN

A321 | A813 1 1/2" = 1' - 0"

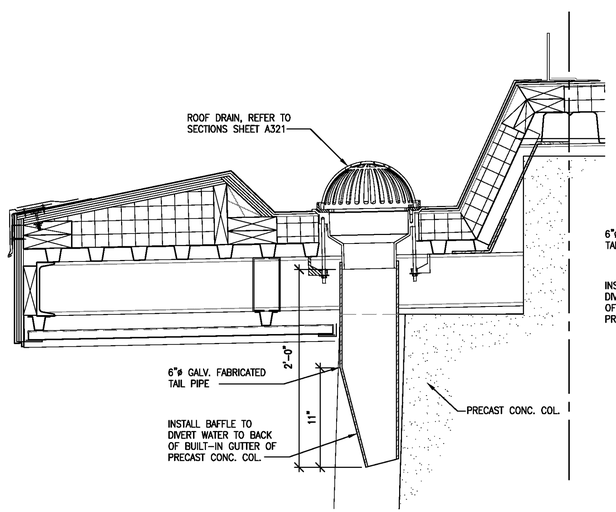

4 DETAIL @ TOP OF COLUMN

A321 | A813 1 1/2" = 1' - 0"

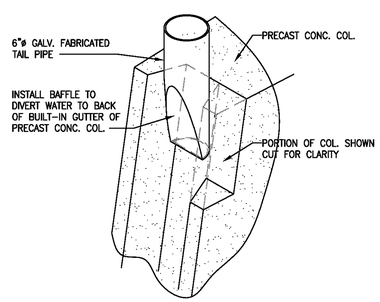

ISO OF TAIL PIPE

NO SCALE

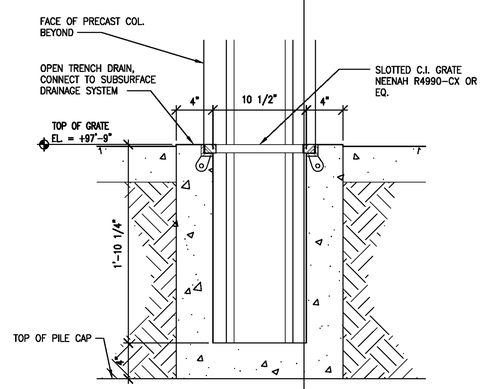

5 DETAIL @ TOP OF COLUMN

A321 | A813 1 1/2" = 1' - 0"

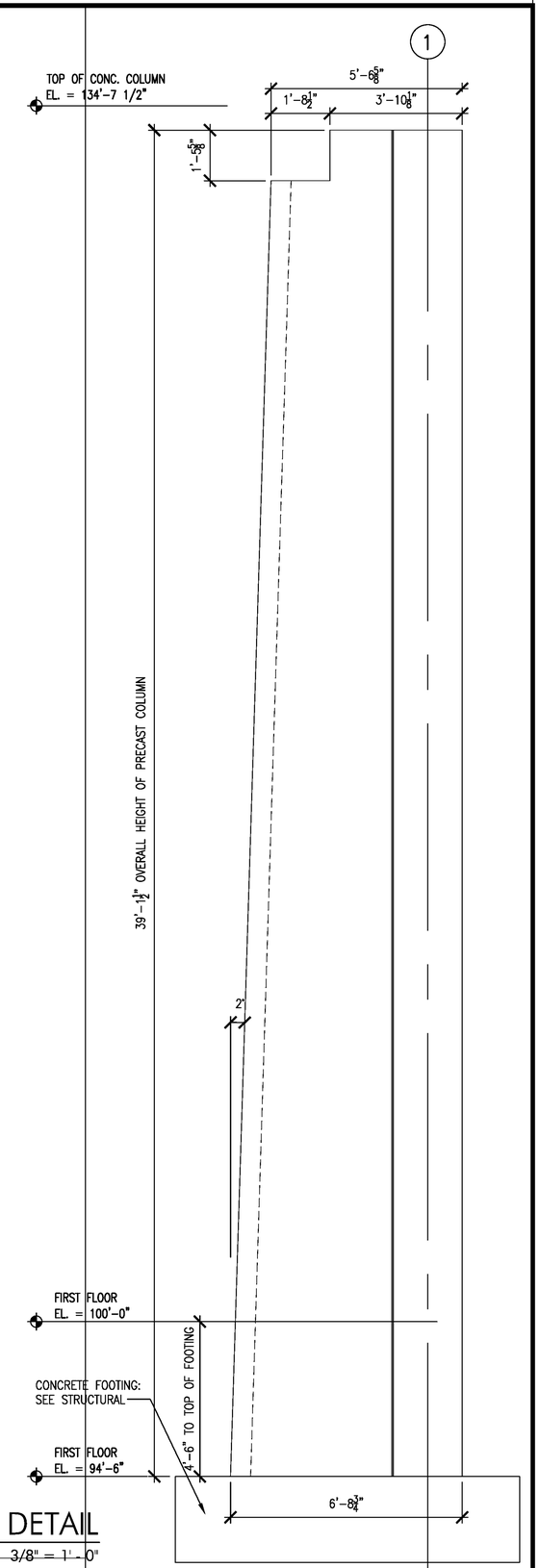

3 ELEVATION DETAIL

A321 | A813 3/8" = 1' - 0"

Waggonner & Ball Architects

2200 PRYTANIA STREET
NEW ORLEANS, LOUISIANA 70130
T 504.524.5308 F 504.524.5314
wbarchitects.com

COPYRIGHT © 2009 by Waggonner & Ball Architects, APC.
All rights reserved. No part of this work covered by the copyright hereon may be reproduced or used in any form or by any means - graphic, electronic or mechanical, including photocopying, recording, taping or information storage and retrieval systems - without written permission of the copyright holder.

ACADEMY OF THE SACRED HEART PHASE 2
New Arts and Athletics Facility

4501 CARONDELET ST.
NEW ORLEANS, LOUISIANA 70115

PROJECT NO.: 0209-20

SHEET TITLE:
SECTION DETAILS
NEW BUILDING

DATE: JAN 08, 2010
DRAWN BY:
REVISION:

A813