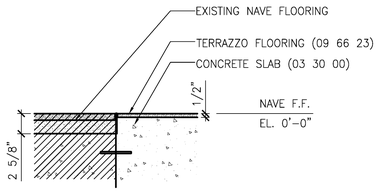

6 SECTION
9.1 | 9.1 THRU NAVE FLOOR 1-1/2" = 1'-0"

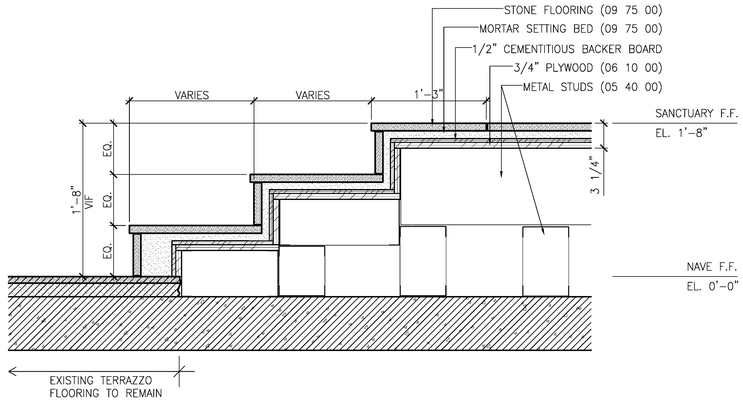

5 SECTION
9.1 | 9.1 THRU SANCTUARY RISERS 1-1/2" = 1'-0"

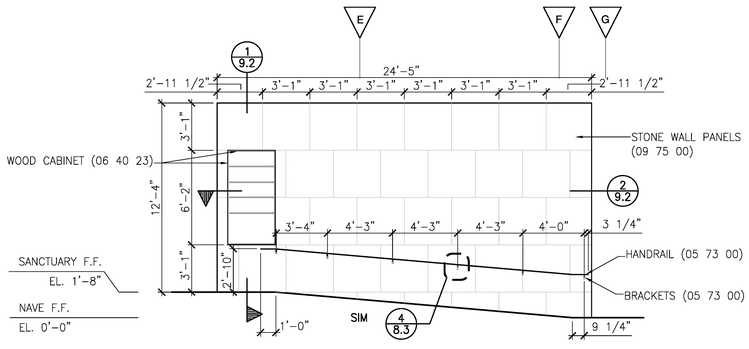

3 ELEVATION OF STONE WALL
9.1 | 9.1 AT CREDENCE SHELF 1/4" = 1'-0"

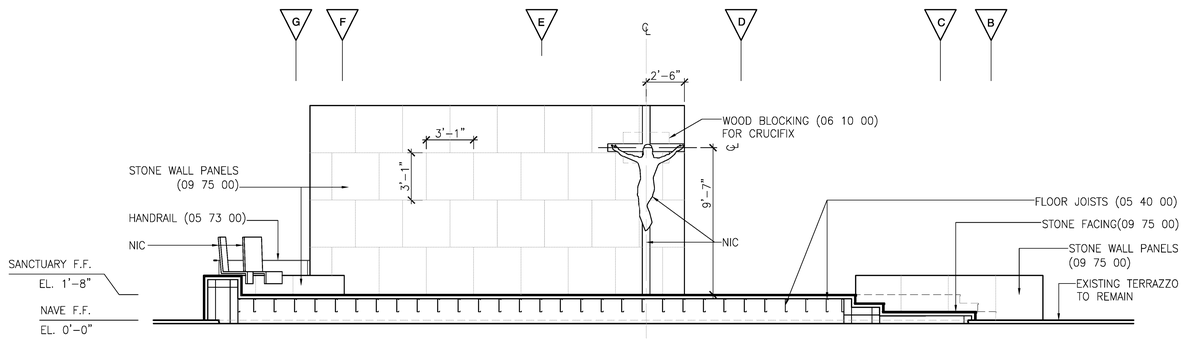

2 SECTION
9.1 | 9.1 THRU SANCTUARY 1/4" = 1'-0"

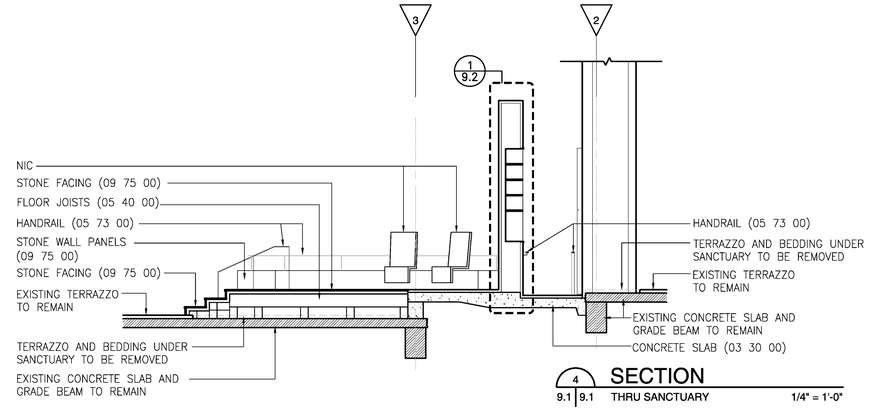

4 SECTION
9.1 | 9.1 THRU SANCTUARY 1/4" = 1'-0"

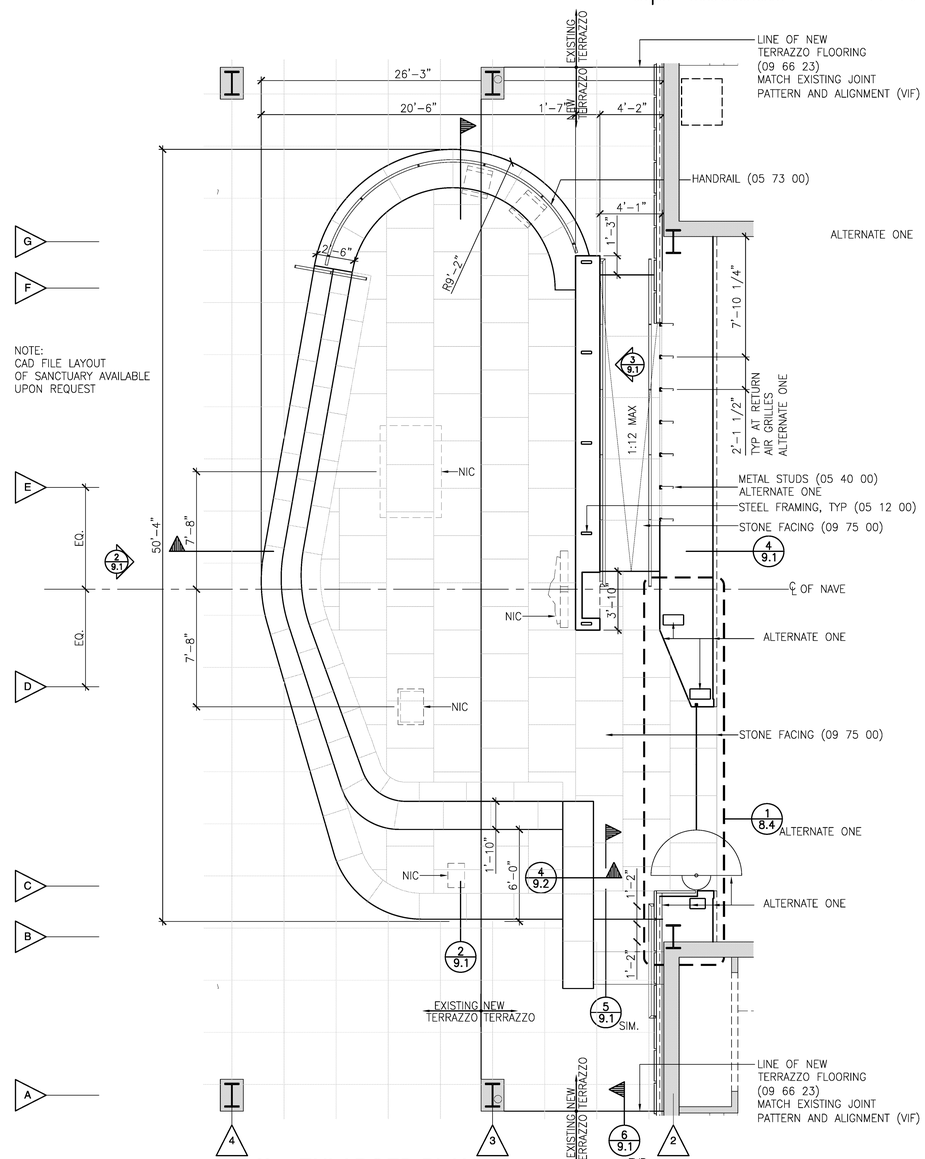

1 ENLARGED PLAN
2.1 | 9.1 OF SANCTUARY 1/4" = 1'-0"

Eskew+Dumez+Ripple
ARCHITECTURE
ENVIRONMENTS
URBAN DESIGN

TRANSFIGURATION OF THE LORD
CHURCH RENOVATIONS

2213 PRYTANIA AVENUE
NEW ORLEANS, LOUISIANA 70122

Date: 7 JULY 2010

MARK J. RIPPLE
REG. NO. 9464
STATE OF LOUISIANA
REGISTERED ARCHITECT

E+D+R No.	09007
Drawn By:	WEST
Drawing Title:	
SANCTUARY - ENLARGED	
PLAN AND SECTIONS	

Sheet No:
9.1

P:\2009_Projects\09007_TOTL Church\Drawings\09EnlargedPlans\0901_Sanctuary.dwg
07 Jul 10 – 11:03am