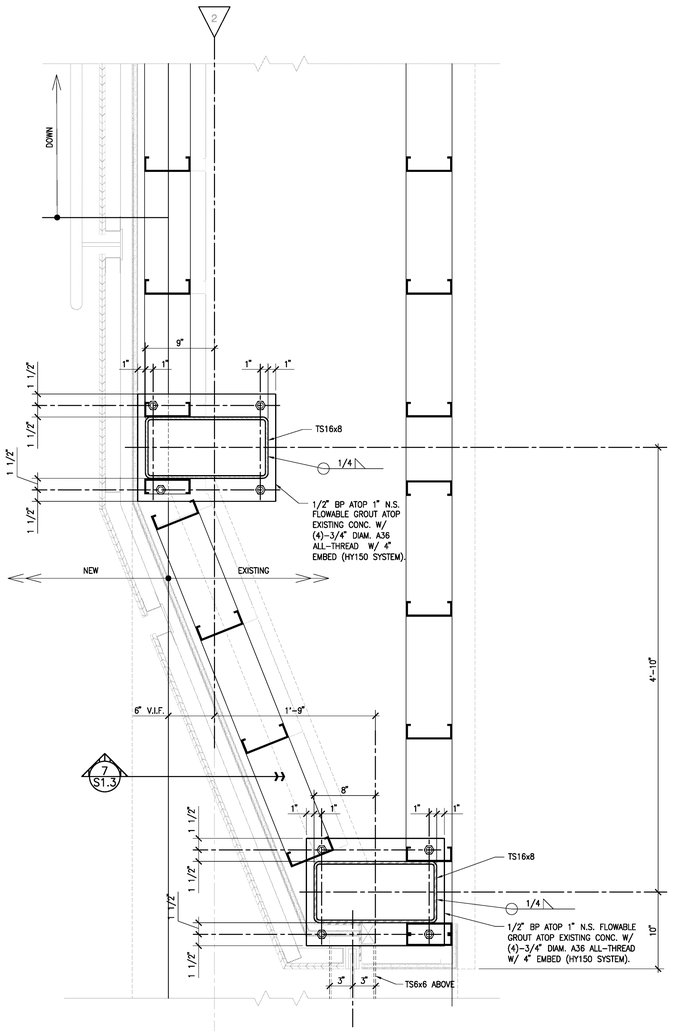

2 PLAN DETAIL
S1.1 | S1.3 1 1/2" = 1'-0"

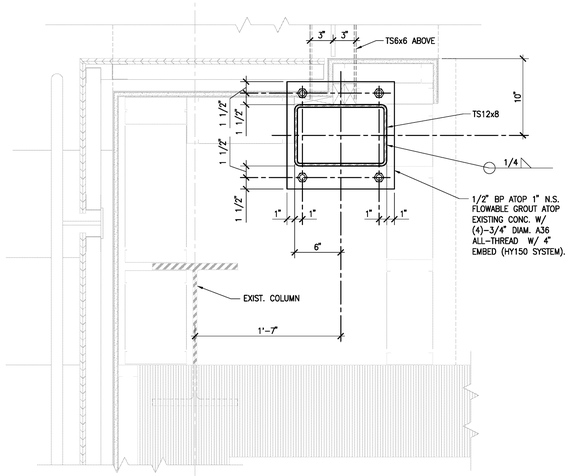

1 PLAN DETAIL
S1.1 | S1.3 1 1/2" = 1'-0"

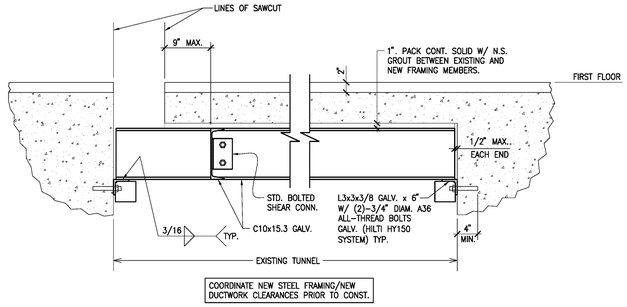

4 SECTION AT NEW FIRST FLOOR SLAB OPENING
S1.1 | S1.3 1" = 1'-0"

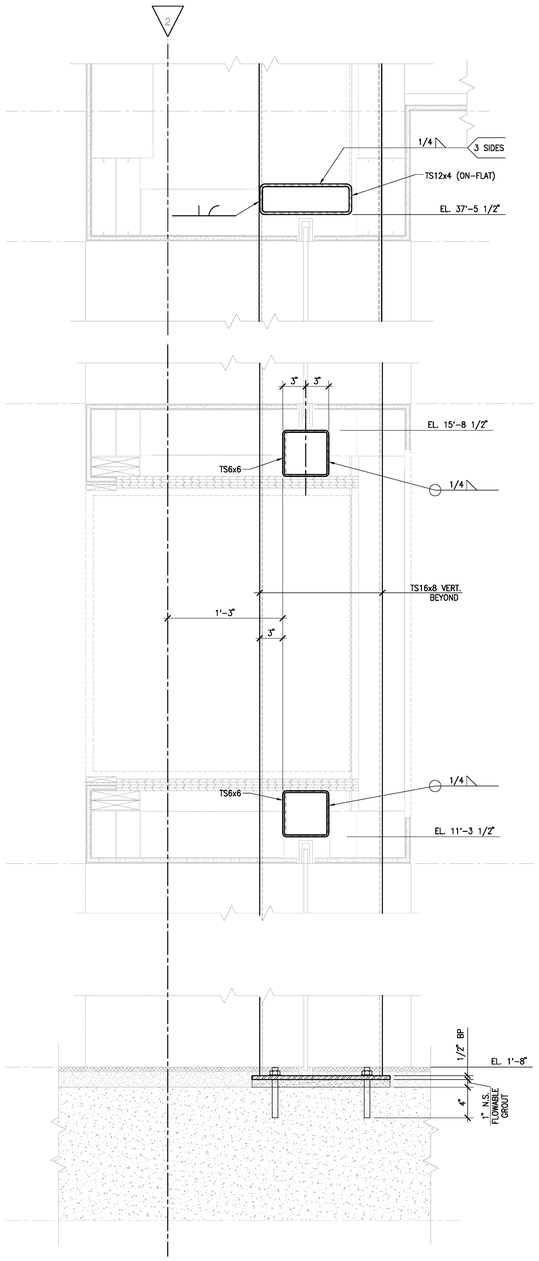

3 SECTION
S1.4 | S1.3 1 1/2" = 1'-0"

5 (NOT USED)
S1.1 | S1.3 3/4" = 1'-0"

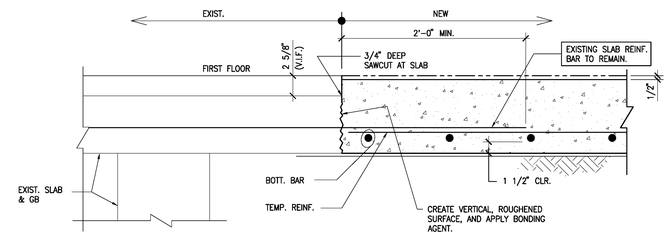

6 SECTION AT FIRST FLOOR
S1.1 | S1.3 1 1/2" = 1'-0"

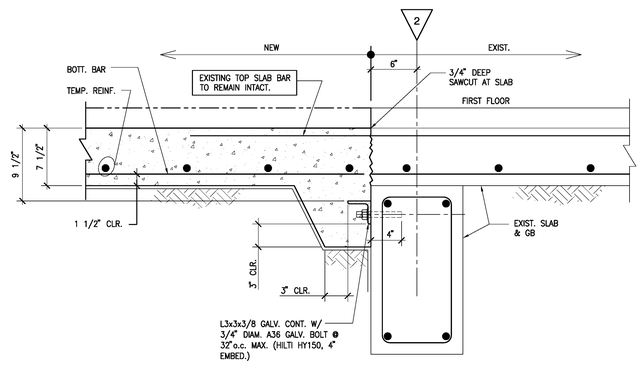

7 SECTION
S1.1 | S1.3 1 1/2" = 1'-0"

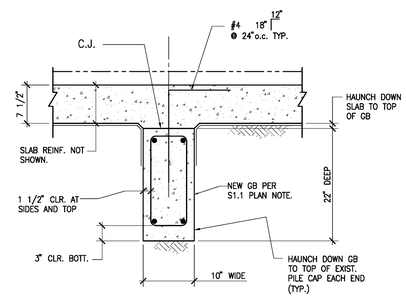

LOWER SLAB CONDITION

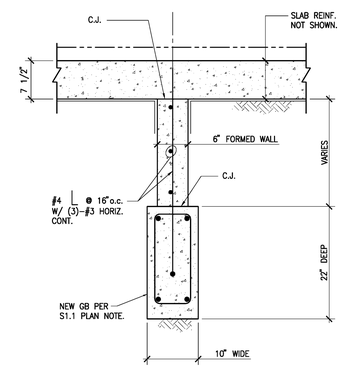

UPPER SLAB CONDITION W/ 6" WALL

8 SECTION
S1.1 | S1.3 1" = 1'-0"

Eskew+Dumez+Ripple
ARCHITECTURE
ENVIRONMENTS
URBAN DESIGN

TRANSFIGURATION OF THE LORD
CHURCH RENOVATIONS

2010 PRYTANIA AVENUE
NEW ORLEANS, LOUISIANA 70122

CONSTRUCTION DOCUMENT PROGRESS

Date: 07 JULY 2010

STATE OF LOUISIANA
JOHN S. ENDOM
REG. No. 28245
REGISTERED PROFESSIONAL ENGINEER
IN
CIVIL ENGINEERING

E+D+R No.	09007
Drawn By:	MDD
Drawing Title:	
DETAILS	

Sheet No:

S1.3

MARK NAME S620_S1.3.dwg DATE JUL 07, 2010 TIME 5:49 PM
E:\Struct\5620_Transfiguration of the Lord\Struct\5620 re-bid(6-7-10current)\5620_S1.3.dwg
07 Jul 10 - 8:35pm