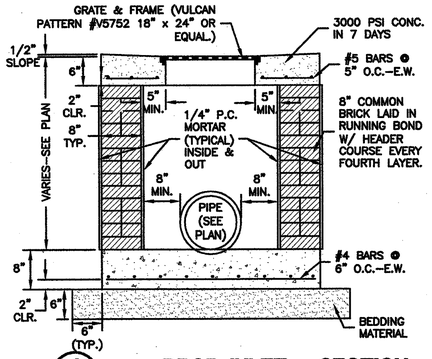

1 DROP INLET - SECTION

X 02721M05catchbasinsect.DWG N.T.S.

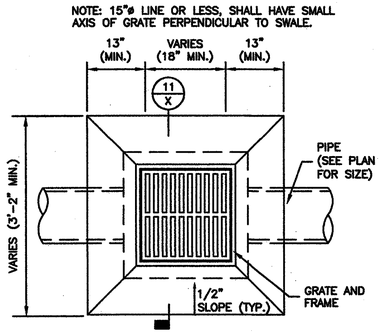

2 DROP INLET IN FIELD-PLAN

X 02721X04catchbasininfieldplan.DWG N.T.S.

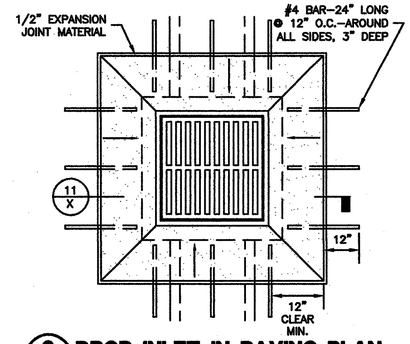

3 DROP INLET IN PAVING-PLAN

X 02721M06cbinpavingplan.DWG N.T.S.

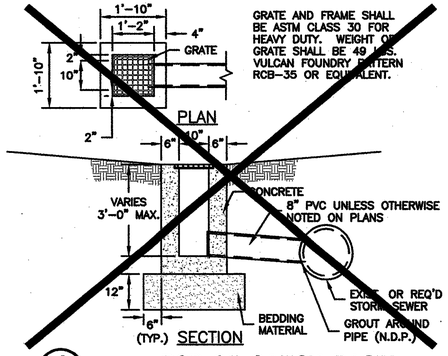

4 RCB-35 CATCH BASIN

X 02721M52rcb35.DWG N.T.S.

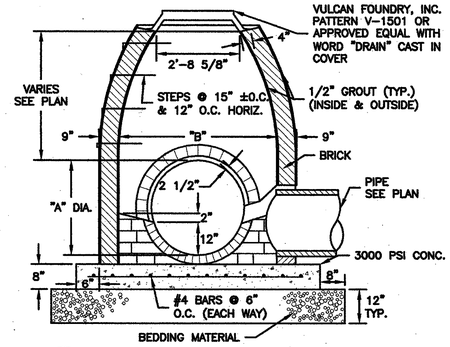

5 DRAINAGE MANHOLE-SECTION

X 02605X02drainagemhsect.DWG N.T.S

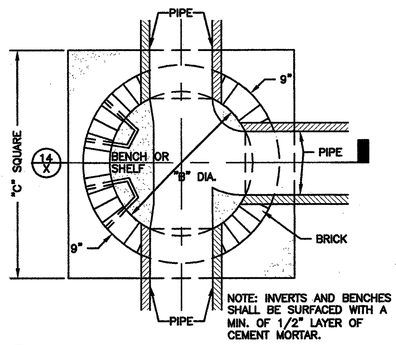

6 DRAINAGE MANHOLE - PLAN

X 02605X01drainagemhplan.DWG N.T.S.

STANDARD M.H. SCHEDULE

"A" (DIA. OF PIPE)	"A" (DIA. EQUIV. RCPA)	"B"	"C"
10",12",16",18",21" & 24"	18" & 21"	4'-0"	6'-4"
27" & 30"	24"	4'-6"	6'-10"
36"	30"	5'-0"	7'-4"
42"	36"	5'-8"	8'-0"

NOTE:
WHENEVER THE NUMBER OF, OR SIZE OF PIPES, OR DEPTH OF MANHOLE MAKES IT IMPRACTICAL OR IMPOSSIBLE TO CONSTRUCT A SOUND MANHOLE TO THE DIMENSIONS OF SHAPE SHOWN, THE CONTRACTOR SHALL CONSTRUCT A CATCH BASIN IN ACCORDANCE WITH THESE PLANS AND INSTALL THE MANHOLE COVER AS SHOWN ON THESE PLANS. THIS WILL BE PAID FOR UNDER THE DRAINAGE MANHOLE PAY ITEM.

7 DRAINAGE MANHOLE - DATA

X 02605M04drainagemhdata.DWG N.T.S.

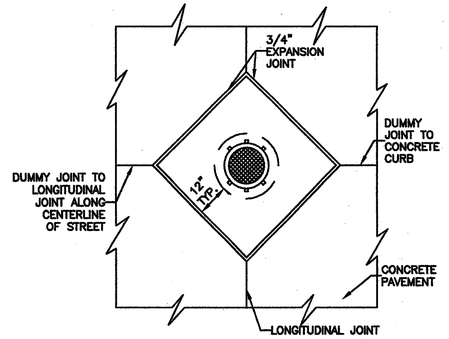

8 BOXING MANHOLE

X N.T.S.

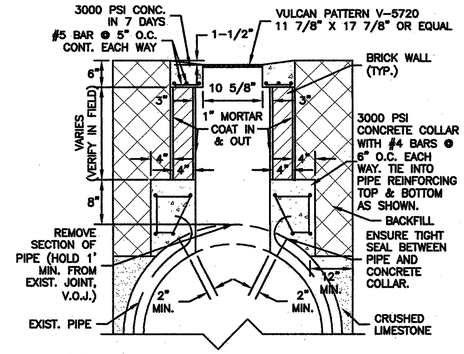

9 TEE INLET - SECTION (RCP)

X 02721M03teeinletsect.DWG N.T.S.

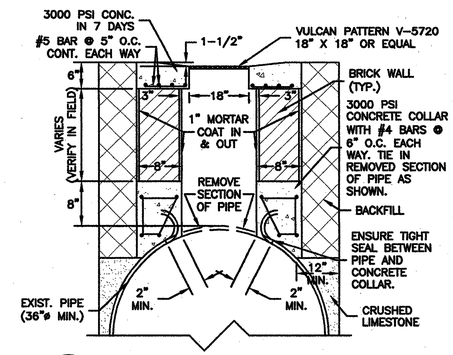

10 TEE INLET - SECTION (CMP)

X 02721M03Bteeinletsect.DWG N.T.S.

project no. 20-0901
drawn EMC
checked MJF
date 01.15.2010
revised

STATE OF LOUISIANA — MICHAEL J. FALKH — License No. 31848 — PROFESSIONAL ENGINEER

MEYER ENGINEERS, LTD.
ENGINEER & ARCHITECT

MISCELLANEOUS DRAINAGE DETAILS

VAL RIESS PARK
MULTI-PURPOSE BUILDING
ST. BERNARD PARISH, OWNER

sheet no.
C3.3
of ____ sheets